Instituto Superior Técnico

BSc Aerospace Engineering

Multivariable, Nonlinear and Optimal Control

Final Report: Linear State Feedback Control of an Inverted Pendulum

Professor: João Manuel Lage de Miranda Lemos

Laboratory Professor: Carlos Filipe Gomes Bispo

Grup: 35

Lucas Moreira Nº 109657

Tomás Teixeira Nº 109766

Pedro Machado Nº 110718

Abril, 2026

Conteúdo

I Introdução 2
I-A Context and Objectives . . . 2
I-B System Description . . . 2

II Theoretical Analysis and Control Design 3
II-A Space-State Formalization . . . 3
II-B State-Space Analysis . . . 3
II-B1 Q1 - System Poles . . . 3
II-B2 Q2 - Controllability . . . 3
II-B3 Q3 - Observability . . . 4
II-B4 Q4 - Bode Plots . . . 4
II-C LQR Controller Design . . . 4
II-D State Estimator Design - LQE . . . 4
II-E Baseline LQG Simulation . . . 4

III Laboratory Work and Experimental Results 5
III-A Realistic System Simulation . . . 5
III-B Initial Controller Testing on Physical Hardware . . . 5
III-C Compensation of Non-Linearities: Motor Deadzone and Steady-State Error . . . 5
III-D Final Controller Tuning and Disturbance Rejection . . . 5

IV Conclusion 6

V Anexos 7

I. Introdução

A. Context and Objectives

This report details the work developed within the scope of the Multivariable, Non-linear, and Optimal Control course laboratory project. The primary objective is to design, simulate, and implement a robust control strategy to stabilize a highly non-linear and inherently unstable system using a pre-existing experimental setup of a rotary inverted pendulum.

The adopted methodology relies on linearizing the plant's mathematical model around its unstable equilibrium point (the upward vertical position) to derive a Linear Time-Invariant (LTI) state-space representation. Based on this model, a Linear Quadratic Gaussian (LQG) control architecture is developed. This comprises a Linear Quadratic Regulator (LQR) to compute the optimal state feedback law, and a Linear Quadratic Estimator (LQE, or Kalman Filter) to estimate the system's full internal state from noisy measurements. The project covers the theoretical analysis of the system, validation through MATLAB/Simulink simulations, and practical real-time implementation on the laboratory's physical hardware, specifically addressing real-world non-linearities such as motor deadzones and steady-state errors.

B. System Description

The physical plant utilized in this work is a rotary inverted pendulum apparatus (a Quanser experimental setup). The mechanical structure consists of a motorized rotary arm that actively maneuvers an unactuated, free-swinging pendulum rod attached to its extremity.

The system operates as a Single-Input Multiple-Output (SIMO) process. The single control input u is the continuous voltage applied to the DC motor that drives the horizontal rotary arm. To monitor the system's behavior, two physical sensors provide the measured output vector y:

- A potentiometer measuring the angular position of the rotary arm α.
- An optical encoder measuring the precise angular position of the pendulum relative to the arm β.

Because the system's complete state vector includes both the angular positions α, β and their respective angular velocities $\dot{\alpha}, \dot{\beta}$, but only the positions are directly measured, the system requires a state observer. Furthermore, the provided physical setup interfaces with the Simulink control environment via A/D and D/A data acquisition boards, allowing the designed controllers to be executed and tested on the real system in real-time.

II. Theoretical Analysis and Control Design

A. Space-State Formalization

A dinâmica não-linear do distema implica que este necessite de ser linearizado em torno de um ponto de equilíbrio, que dado o objetivo deste relatório, é o ponto de equilíbrio instável onde o pêndulo se encontra na posição vertical para cima. Este equilíbrio corresponde a todas as variáveis de estado iguais a zero. A derivação do modelo não-linear e a subsequente linearização não são objeto deste relatório, podendo ser encontrados no Capítulo 2 da tese de Samuel Balula **(fazer referência)**. O modelo linearizado do sistema que representa a dinâmica razoavelmente bem é dado por:

$$\begin{cases} \dot{\mathbf{x}} = A\mathbf{x} + B\mathbf{u} \\ \mathbf{y} = C\mathbf{x} + D\mathbf{u} \end{cases}$$

onde $\mathbf{x} = [\alpha\ \dot{\alpha}\ \beta\ \dot{\beta}\ i]^T$ é o vetor de estados de dimensão 5 e i é a corrente do motor. O vetor de entrada unidimensional $\mathbf{u} = u$ corresponde à diferença de potencial contínua, em *Volts*, aplicada nos terminais do motor DC através de um power amplifier, controlando diretamente α. O vetor de saída $\mathbf{y} = [\alpha\ \beta]^T$ é composto pelas medições dos sensores, correspondendo às posições angulares do braço e do pêndulo, respetivamente.

As matrizes do modelo A, B, C e D

$$A = \begin{bmatrix} 0 & 1 & 0 & 0 & 0 \\ 0 & -0.0174 & 20.7861 & -0.0023 & 57.5344 \\ 0 & 0 & 0 & 1 & 0 \\ 0 & -0.0174 & 63.8319 & -0.0071 & 57.4388 \\ 0 & -232.0252 & 0 & 0 & -755.425 \end{bmatrix}$$

$$B = \begin{bmatrix} 0 \\ 0 \\ 0 \\ 0 \\ 333.3 \end{bmatrix}, \quad C = \begin{bmatrix} 1 & 0 & 0 & 0 & 0 \\ 0 & 0 & 1 & 0 & 0 \end{bmatrix}, \quad D = \begin{bmatrix} 0 \\ 0 \end{bmatrix}$$

B. State-Space Analysis

In this section, we analyze the previously formulated state-space model in terms of system poles, controllability, observability, and frequency response.

1) Q1 - System Poles: The system poles are the eigenvalues of the dynamics matrix A. Using MATLAB's `eig()` function, the following poles were obtained:

$$\text{eig}(A) = \begin{bmatrix} 0 \\ -737.3184 \\ -19.3673 \\ -5.7612 \\ 6.9974 \end{bmatrix} \tag{1}$$

Analysis of the poles shows that the system has three stable modes: two correspond to the mechanical damping of the pendulum, $\lambda_3 = -19.3673$ and $\lambda_4 = -5.7612$, and a very fast mode associated with the motor current, $\lambda_2 = -737.3184$. Additionally, the state α generates a pole at the origin, $\lambda_1 = 0$, due to being an integrator. This implies that after a perturbation, α will accumulate error over time without diverging or converging, reflecting the fact that the arm rotates without friction and does not naturally settle to an equilibrium.

The single unstable mode, $\lambda_5 = 6.9974$, is related to the vertical pendulum position, which is the primary state we aim to control.

2) Q2 - Controllability: A system is controllable if it is possible to transition from any state x_1 to another arbitrary state x_2 by applying an input $u(t)$ over a finite time interval. Knowing whether the system is controllable is crucial for understanding the limitations of the controller.

The controllability matrix is defined as:

$$\mathcal{C} = \begin{bmatrix} B & AB & A^2B & \cdots & A^{n-1}B \end{bmatrix}, \tag{2}$$

where n is the number of states. Using MATLAB's `ctrb(A,B)` function, we obtained:

$$\mathcal{C} = \begin{bmatrix} 0 & 0 & 1.918 \times 10^4 & -1.449 \times 10^7 & 1.069 \times 10^{10} \\ 0 & 1.918 \times 10^4 & -1.449 \times 10^7 & 1.069 \times 10^{10} & -7.881 \times 10^{12} \\ 0 & 0 & 1.915 \times 10^4 & -1.446 \times 10^7 & 1.067 \times 10^{10} \\ 0 & 1.915 \times 10^4 & -1.446 \times 10^7 & 1.067 \times 10^{10} & -7.869 \times 10^{12} \\ 3.333 \times 10^2 & -2.518 \times 10^5 & 1.858 \times 10^8 & -1.370 \times 10^{11} & 1.010 \times 10^{14} \end{bmatrix}$$

The system is controllable if the rank of the controllability matrix equals the number of states. Using MATLAB's `rank()` function, we obtained $\text{rank}(\mathcal{C}) = 5$, which equals the number of states. Therefore, the system is controllable.

3) Q3 - Observability: A system is observable if, for any initial state $x(0)$, knowledge of the input $u(t)$ and output $y(t)$ over a finite time interval uniquely determines $x(0)$. Although the system is controllable, implementing a state-feedback controller requires knowledge of the full state[1]. Since the state is not directly measurable, it must be reconstructed from the outputs, which is only possible if the system is observable.

The observability matrix is defined as:

$$\mathcal{O} = \begin{bmatrix} C \\ CA \\ CA^2 \\ \vdots \\ CA^{n-1} \end{bmatrix} \tag{3}$$

Using MATLAB's `obsv()` function, the observability matrix was calculated as:

$$\mathcal{O} = \begin{bmatrix} 1 & 0 & 0 & 0 & 0 \\ 0 & 0 & 1 & 0 & 0 \\ 0 & 1 & 0 & 0 & 0 \\ 0 & 0 & 0 & 1 & 0 \\ 0 & -1.740 \times 10^{-2} & 2.079 \times 10^1 & -2.316 \times 10^{-3} & 5.753 \times 10^1 \\ 0 & -1.738 \times 10^{-2} & 6.383 \times 10^1 & -7.114 \times 10^{-3} & 5.744 \times 10^1 \\ 0 & -1.335 \times 10^4 & -5.096 \times 10^{-1} & 2.079 \times 10^1 & -4.346 \times 10^4 \\ 0 & -1.333 \times 10^4 & -8.152 \times 10^{-1} & 6.383 \times 10^1 & -4.339 \times 10^4 \\ 0 & 1.008 \times 10^7 & -2.762 \times 10^5 & 3.027 \times 10^1 & 3.207 \times 10^7 \\ 0 & 1.007 \times 10^7 & -2.729 \times 10^5 & 2.960 \times 10^1 & 3.202 \times 10^7 \end{bmatrix} \tag{4}$$

Applying the `rank()` function shows that $\text{rank}(\mathcal{O}) = 5$, which equals the number of states. Therefore, the system is observable.

4) Q4 - Bode Plots:

C. LQR Controller Design

Q5

D. State Estimator Design - LQE

Q6, Q7

E. Baseline LQG Simulation

Q8

[1]State-feedback control requires knowledge of the full state since the control law $u(t) = -Kx(t)$ explicitly depends on the state vector. In this project, an estimator was designed to reconstruct the state, resulting in the control law $u(t) = -K\hat{x}(t)$. State estimation is only possible if the system is observable, making observability a prerequisite for implementing state-feedback control when the state is not directly measurable.

III. Laboratory Work and Experimental Results

A. Realistic System Simulation

B. Initial Controller Testing on Physical Hardware

C. Compensation of Non-Linearities: Motor Deadzone and Steady-State Error

D. Final Controller Tuning and Disturbance Rejection

IV. Conclusion

V. Anexos

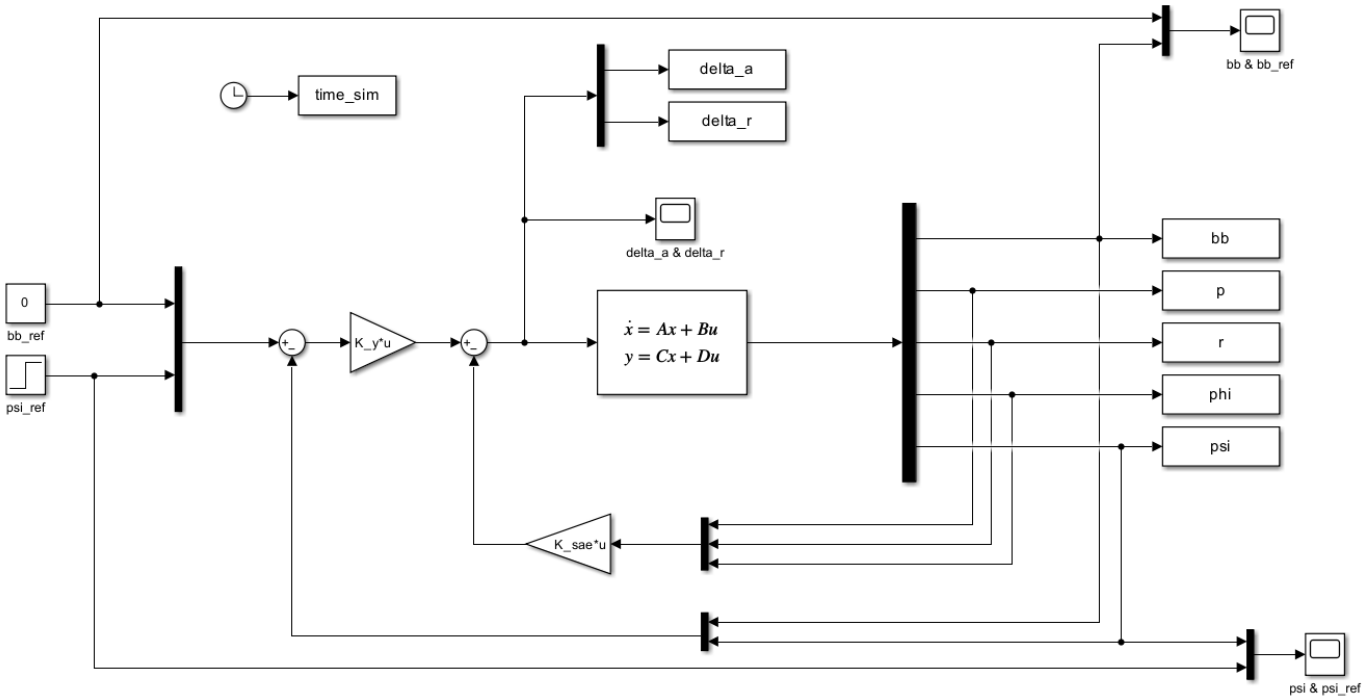

Figura 1: Diagrama de blocos da realimentação em servomecanismo