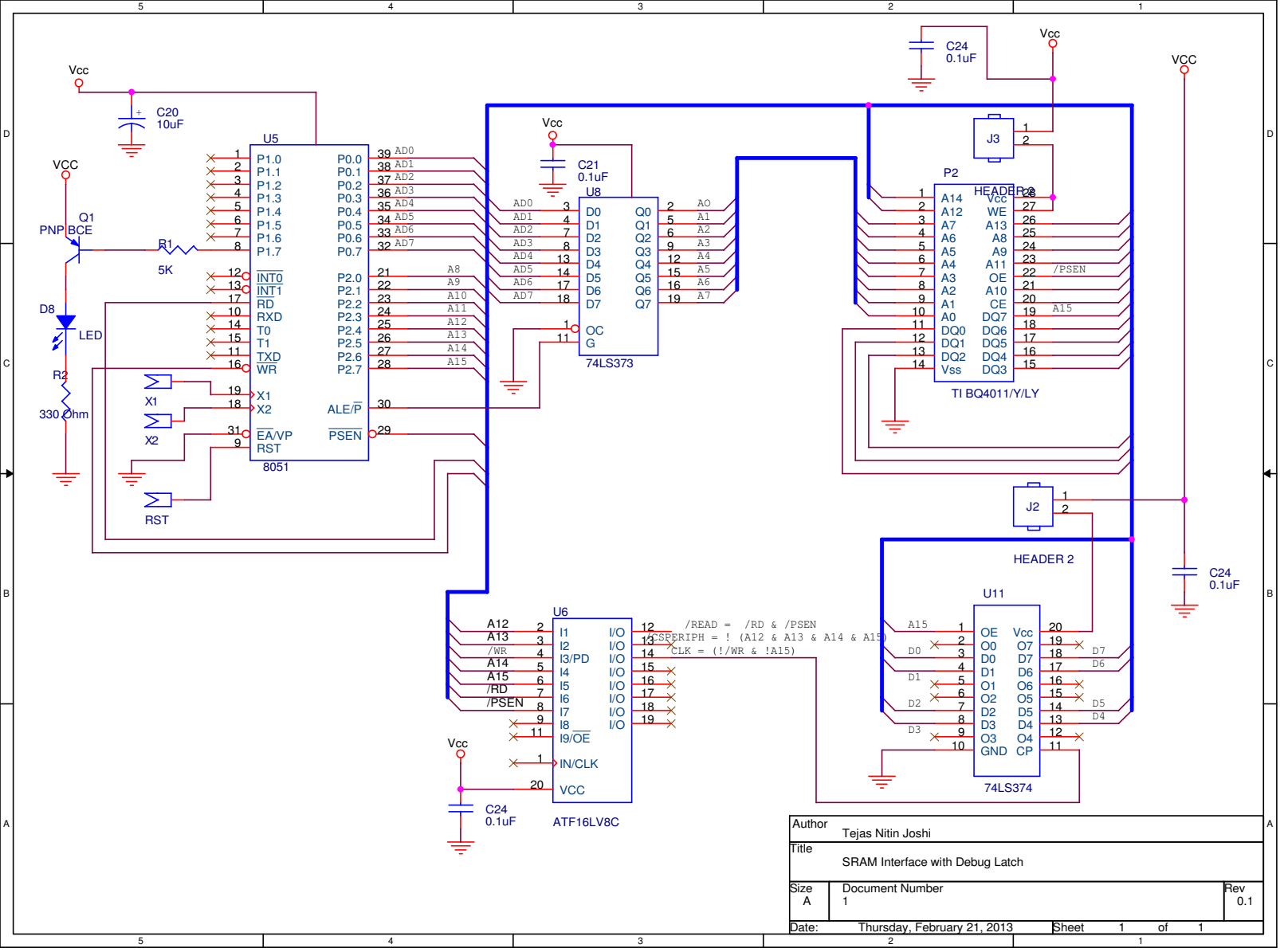

Author	Tejas Nitin Joshi	
Title	SRAM Interface with Debug Latch	
Size A	Document Number 1	Rev 0.1
Date: Thursday, February 21, 2013	Sheet 1 of 1	