Numark
V7
(NK14)
Service Manual

Rev. 1
2010.04.13

ATTENTION!

THIS DOCUMENT CONTAINS SENSITIVE PROPRIETARY INFORMATION.
ALL RECIPIENTS MUST HAVE A CURRENT NON-DISCLOSURE AGREEMENT ON FILE WITH NUMARK INDUSTRIES.

DO NOT MAKE ILLEGAL COPIES OF THIS DOCUMENT

The information in this document contains privileged and confidential information. It is intended only for the use of those authorized by Numark. If you are not the authorized, intended recipient, you are hereby notified that any review, dissemination, distribution or duplication of this document is strictly prohibited. If you are not authorized, please contact Numark and destroy all copies of this document. You may contact Numark at **support@numark.com**.

Copyright Numark Industries

PREFACE

This document is intended to assist the service technician in the operation, maintenance and repair of the Numark device. Together with the User Reference Manual, this document provides a complete description of the functionality and serviceability of the Device. Any comments or suggestions you may have pertaining to the document are welcome and encouraged.

READ THIS!

In addition to any purchase price that Numark may charge as consideration for Numark selling or otherwise transferring this service manual ("Manual") to you, if you are not a service and repair facility ("Service Center") authorized by Numark in writing to be an authorized Service Center, Numark sells or transfers the Manual to you on the following terms and conditions:

Only Service Centers authorized by Numark in writing are authorized to perform service and repairs covered by an Numark warranty (if any), and transfer of the Manual to you does not authorize you to be an authorized Service Center. **Therefore, if you perform, or if the Manual is used to perform, any service or repairs on any Numark product or part thereof, any and all warranties of Numark as to that product and any service contract with Numark for that product shall be voided and shall no longer apply for such product, even if your services or repairs were done in accordance with the Manual.**

All service or repairs done by you or with reference to the Manual shall be solely your responsibility, and Numark shall have no liability for any such repairs or service work. **All such service or repairs are performed at the sole risk of the person performing the service or repairs.** You agree that all such work will be performed in a competent, professional and safe manner at all times and to indemnify and fully hold Numark and its successors and assigns harmless in the event of any failure to so perform.

Your purchase of the Manual shall be for your own ultimate use and shall not be for purposes of resale or other transfer.

As the owner of the copyright to the Manual, Numark does not give you the right to copy the Manual, and you agree not to copy the Manual without the written authorization of Numark. Numark has no obligation to provide to you any correction of, or supplement to, the Manual, or any new or superseding version thereof.

Numark shall have the right to refuse to sell or otherwise transfer repair parts or materials to you in its sole discretion. You shall not use, sell or otherwise transfer spare or replacement parts supplied by Numark to you (i) to repair or be used in products manufactured for or by third parties or (ii) to any third parties for any purpose.

You shall not make any warranties or guarantees with respect to the products of Numark or the use thereof on behalf of Numark or in your own name.

The foregoing describes the entire understanding related to sale or transfer of the Manual to you, and no other terms shall apply unless in a writing signed by an authorized representative of Numark.

All Trademarks are property of their respective companies.

WARNINGS

TO REDUCE THE RISK OF ELECTRIC SHOCK OR FIRE, DO NOT EXPOSE THIS PRODUCT TO WATER OR MOISTURE.

The arrowhead symbol on a lightning flash inside a triangle is intended to alert the user to the presence of uninsulated "dangerous voltage" within the enclosed product which may be of sufficient magnitude to constitute a risk of electric shock to persons.

The exclamation point inside a triangle is intended to alert the user to the presence of important operating, maintenance and servicing instructions in the literature which accompanies the product.

REPAIR BY ANY PERSON OR ENTITY OTHER THAN AN AUTHORIZED NUMARK SERVICE CENTER WILL VOID THE NUMARK WARRANTY.

PROVISION OF THIS MANUAL DOES NOT AUTHORIZE THE RECIPIENT TO COMPETE WITH ANY NUMARK DISTRIBUTOR OR AUTHORIZED REPAIR SERVICE CENTER IN THE PROVISION OF REPAIR SERVICES OR TO BE OR MAKE REPAIRS AS AN AUTHORIZED SERVICE CENTER.

ALL REPAIRS DONE BY ANY ENTITY OTHER THAN AN AUTHORIZED NUMARK SERVICE CENTER SHALL BE SOLELY THE RESPONSIBILITY OF THAT ENTITY, AND NUMARK SHALL HAVE NO LIABILITY TO THAT ENTITY OR TO ANY OTHER PARTY FOR ANY REPAIRS BY THAT ENTITY.

Regarding the Power Supply Fuse

CAUTION: The product under service may employ the use of a replaceable fuse. Danger of fire or electrocution if fuse is incorrectly replaced. Replace with only the same type or equivalent type recommended by the equipment manufacturer.

Regarding the Internal Battery

CAUTION: The product under service may employ the use of a internal battery. Danger of explosion if battery is incorrectly replaced. Replace only with the same or equivalent type recommended by the manufacturer. Dispose of used batteries according to the manufacturer's instruction.

Safety Instructions

Carefully read the applicable items of the operating instructions and these safety suggestions before using this product. Use extra care to follow the warnings written on the product itself and in the operating instructions. Keep the operating instructions and safety suggestions for reference in the future.

1. Power Source. The product should only be connected to a power supply which is described either in the operating instructions or in markings on the product.

2. Power Cord Protection. AC power supply cords should be placed such that no one is likely to step on the cords and such that nothing will be placed on or against them.

3. Periods of Non-use. If the product is not used for any significant period of time, the product's AC power supply cord should be unplugged from the AC outlet.

4. Foreign Objects and Liquids. Take care not to allow liquids to spill or objects to fall into any openings of the product.

5. Water or Moisture. The product should not be used near any water or in moisture.

6. Heat. Do not place the product near heat sources such as stoves, heat registers, radiators or other heat producing equipment.

7. Ventilation. When installing the product, make sure that the product has adequate ventilation. Improperly ventilating the product may cause overheating, which may damage the product.

8. Mounting. The product should only be used with a rack which the manufacturer recommends. The combination of the product and rack should be moved carefully. Quick movements, excessive force or uneven surfaces may overturn the combination which may damage the product and rack combination.

9. Cleaning. The product should only be cleaned as the manufacturer recommends.

10. Service. The user should only attempt the limited service or upkeep specifically described in the operating instructions for the user. For any other service required, the product should be taken to an authorized service center as described in the operating instructions.

11. Damage to the Product. Qualified service personnel should service the unit in certain situations including without limitation when:
    a. Liquid has spilled or objects have fallen into the product,
    b. The product is exposed to water or excessive moisture,
    c. The AC power supply plug or cord is damaged,
    d. The product shows an inappropriate change in performance or does not operate normally, or
    e. The enclosure of the product has been damaged.

SERVICE MANUAL

MODEL:V7

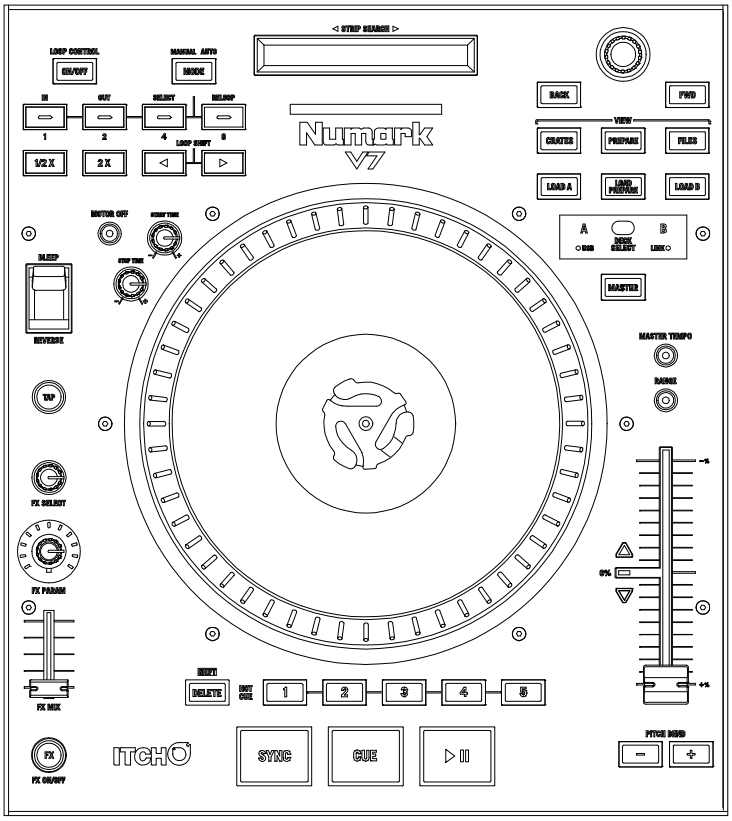

SPECIFICATION

FUNCTION

1. MOTOR TORQUE – Flip this switch to adjust the torque of the PLATTERS. At the high setting, the PLATTERS will have the heavier, stronger feel of “modern” turntables. At the lower setting, they are lighter and more graceful – the feel of a “classic” turntable.
2. DECK A / DECK B OUTPUT (RCA) – Use standard RCA cables to connect these outputs for Deck A and Deck B to the left and right channels (respectively) of your mixer.
3. DECK LOCATION SWITCH – Reserved for future use.
4. LINK CONNECTION – If you are using two V7s, connect their LINK CONNECTIONS with the included link cable.
5. START TIME / STOP TIME – Control the rate at which the playback shifts from “play” to “pause” and from “pause” to “play.”
6. BLEEP / REVERSE – Reverses audio playback of the track on the corresponding deck.
7. SYNC – Automatically matches the corresponding Deck’s tempo with the other Deck’s tempo.

.

8. IN – Press this to set a “Loop In” point where your loop will begin. If you are already in a loop when you press it, you can “fine tune” the placement of the “Loop In” point by moving the PLATTER.
9. OUT – Press this to set a “Loop Out” point where your loop will end. If you are already in a loop when you press it, you can “fine tune” the placement of the “Loop Out” point by moving the PLATTER.

10. RELOOP – Press this to jump to the start of the loop and enable it. If the Deck is already looping when you press it, Pointer will jump to the start of the loop and continue. If no loop is set, nothing will happen.
11. 1/2 X – Press this to halve the length of the selected loop.
12. 2 X – Press this to double the length of the selected loop.
13. STRIP SEARCH – The length of this strip represents the length of the entire track. Place your finger on a point along this sensor to jump to that point in the track. (If you want to scroll through a track, we recommend using your computer rather than running 'your finger along the strip.)
14. TAP – Tap this button at the same tempo as the track to help the software detect a more accurate BPM reading.
15. CRATES – Press this to move the selector to the Crates Panel in the software.

STANDARD

1. MaxMSP test program for production Line
2. AP fest specification

	RCA Output
Voltage	AC 100V~240V 50~60Hz
Volume	2 ± 0.5V
Distortion defection	0.01% below
S/ N	96dBr upward
Separation	96dBr upward
F/R	20~20KHz ± 0.5dB

DISASSEMBLY PROCEDURES

1. REMOVAL OF CABINET AND BOTTOM CHASSIS. (Fig1)

(A) REMOVAL 27 PCS OF SCREWS BEFORE REMOVE THE BOTTOM CHASSIS.

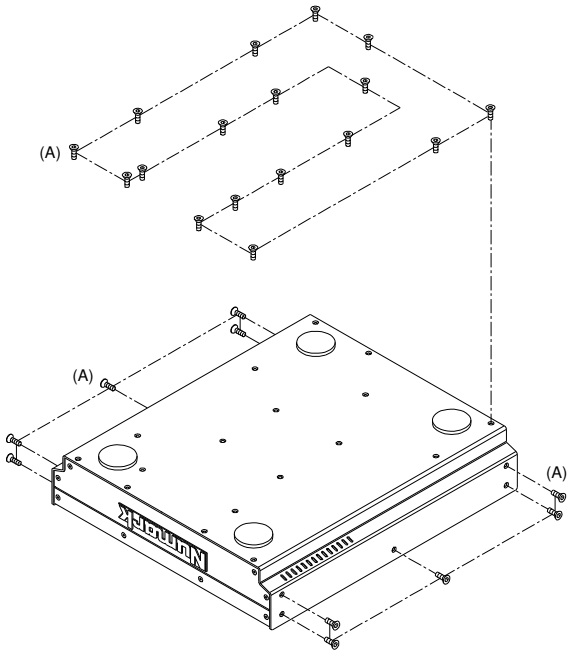

Fig.1

2.REMOVAL OF MOTOR CONTRON PCB AND MAIN PCB.(Fig.2)

(A) REMOVE THE 3 PCS CONNECTORS.
(B) REMOVE THE 4 PCS OF SCREWS BEFORE REMOVAL OF MOTOR CONTRON PCB.
(C) REMOVE THE 4 PCS SCREW.
(D) REMOVE THE 3 PCS OF CONNECTORS BEFORE REMOVAL OF MAIN PCB.

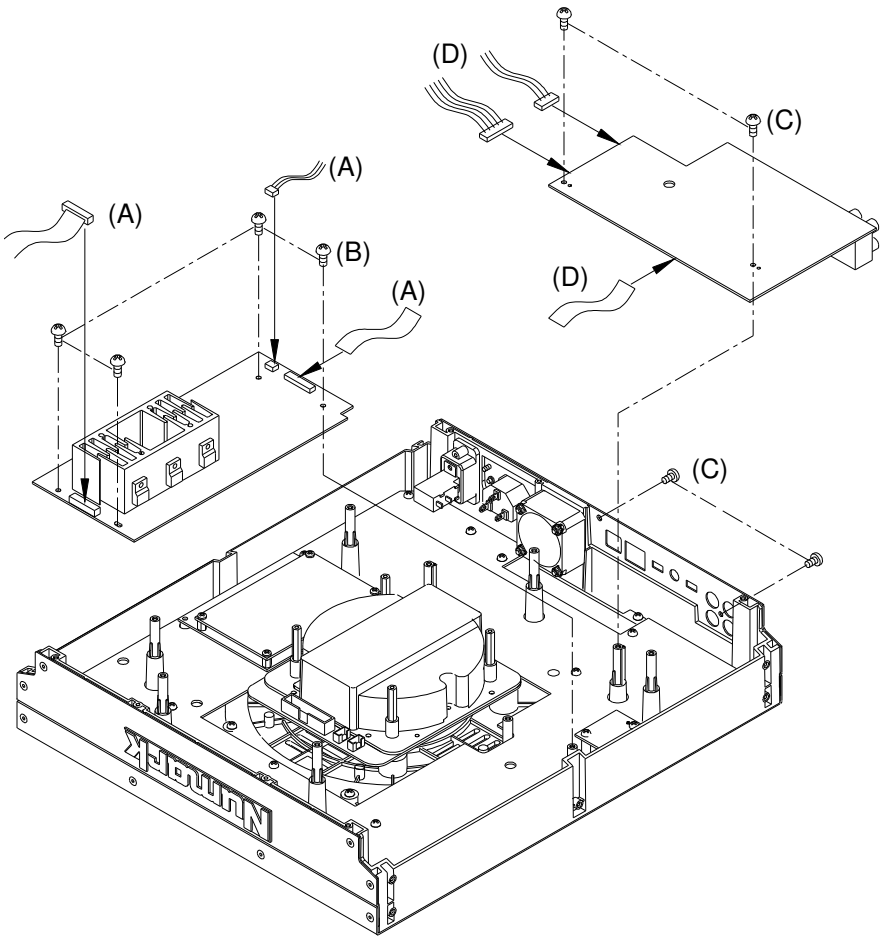

Fig.2

3.REMOVAL OF SWITCHING POWER AND Bleep/Reverse PCB .(Fig3)

(A) REMOVE THE 1 PC OF CONNECTOR.
(B) REMOVE THE 4 PCS SCREW.
(C) REMOVE THE 3 PCS COPPER.
(D) REMOVE THE 1 PC SCREW BEFORE REMOVAL OF SWITCHING PCB.
(E) REMOVE THE 3 PCS OF SCREWS BEFORE REMOVAL OF Bleep/Reverse PCB.

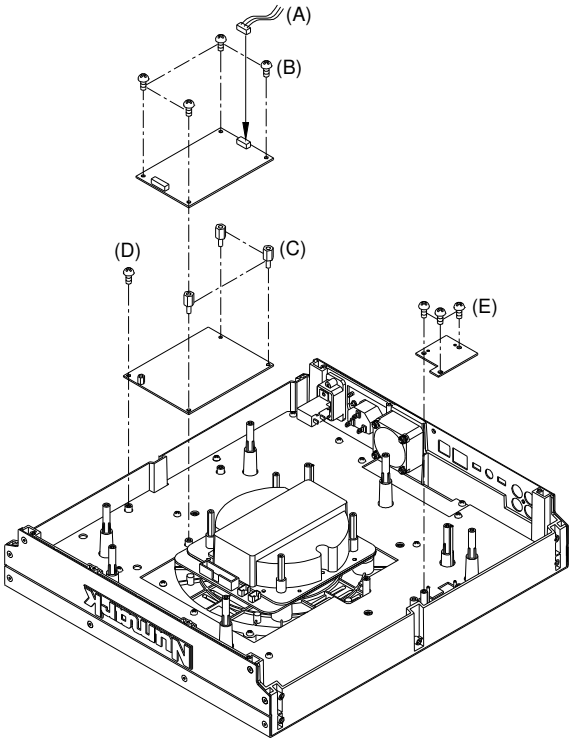

Fig.3

4.REMOVAL OF FUNTION PCB.(Fig4)

(A) REMOVE THE 7 PCS OF VR KNOB.
(B) REMOVE THE 4 PCS OF SCREW.
(C) REMOVE THE 1 PC OF CONNECTOR.
(D) REMOVE THE 22 PCS CONNECTOR BEFORE REMOVAL OF FUNTION PCB.

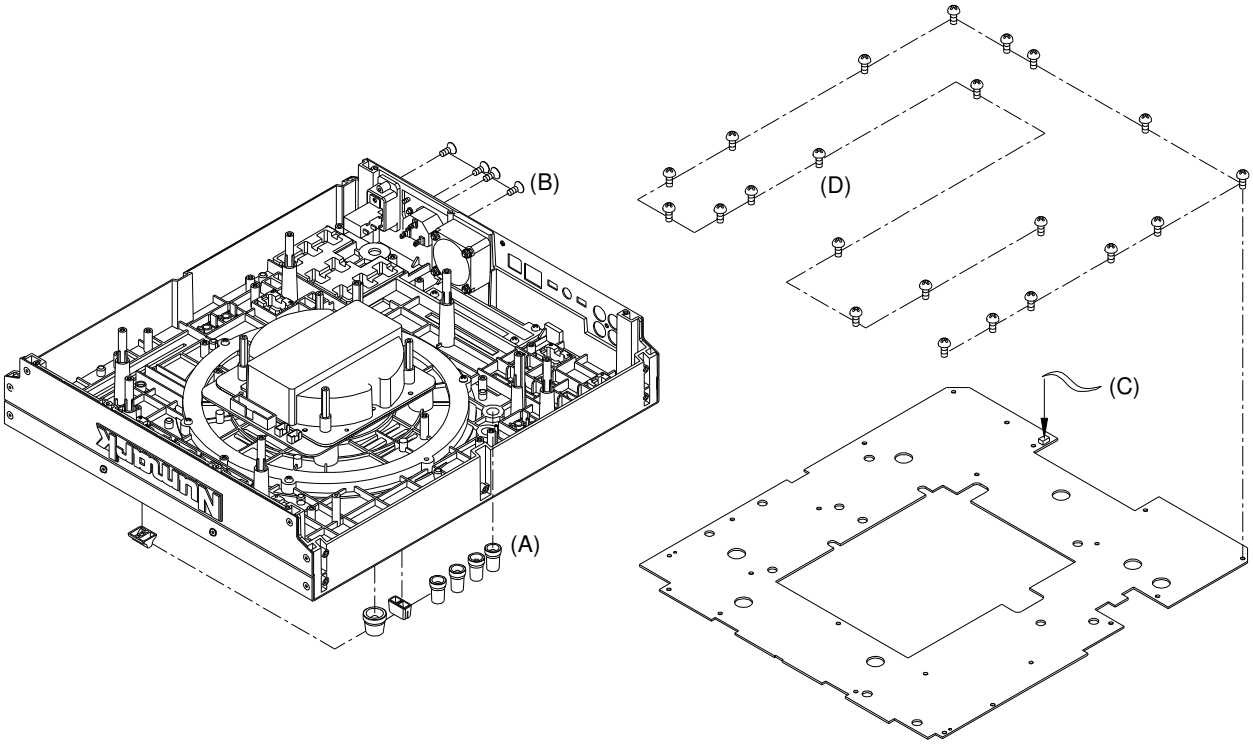

Fig.4

PACKING DIAGRAM

NK14MAR01/02/03/04/06/07

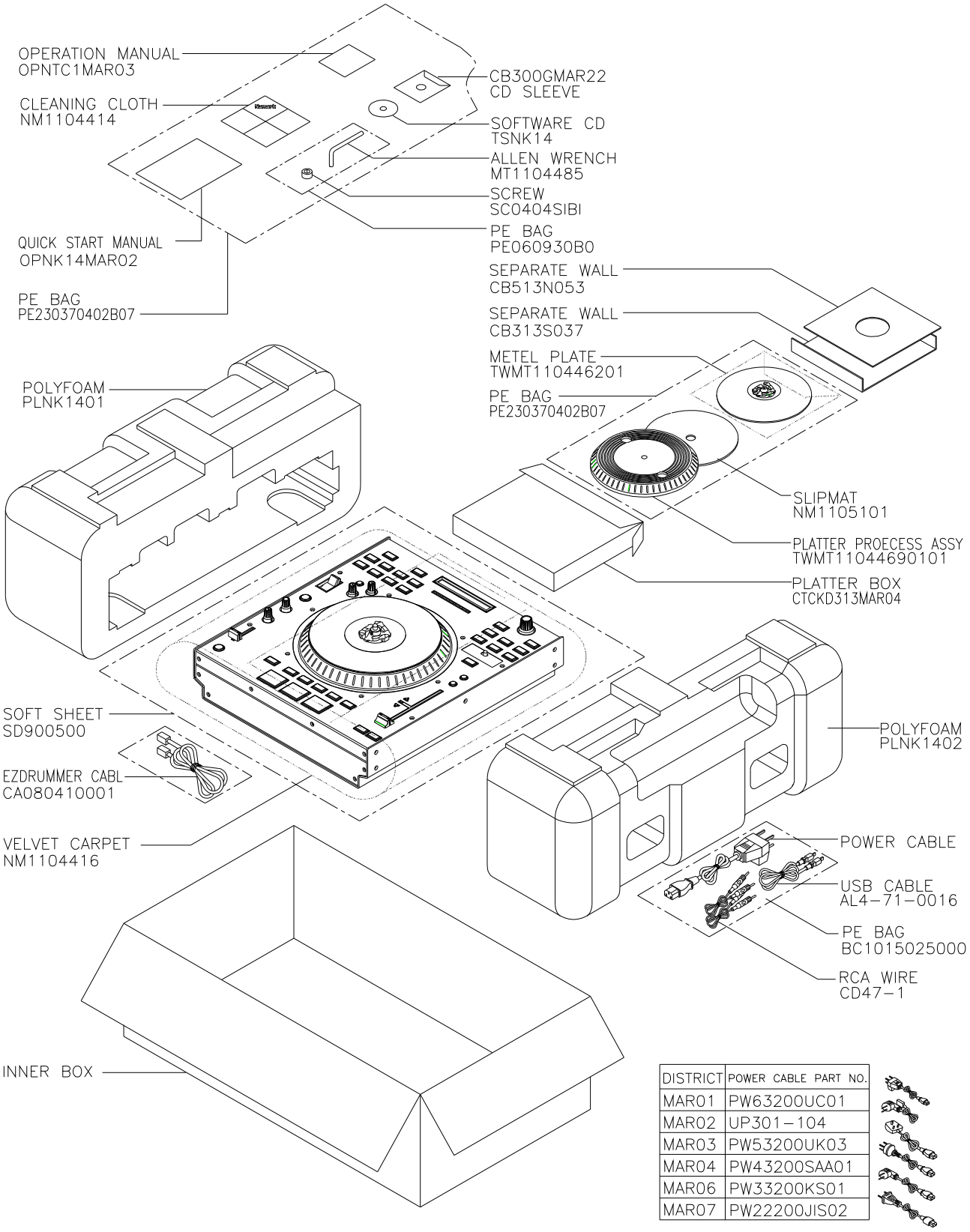

DISTRICT	POWER CABLE PART NO.
MAR01	PW63200UC01
MAR02	UP301-104
MAR03	PW53200UK03
MAR04	PW43200SAA01
MAR06	PW33200KS01
MAR07	PW22200JIS02

PACKING DIAGRAM

NK14MAR05

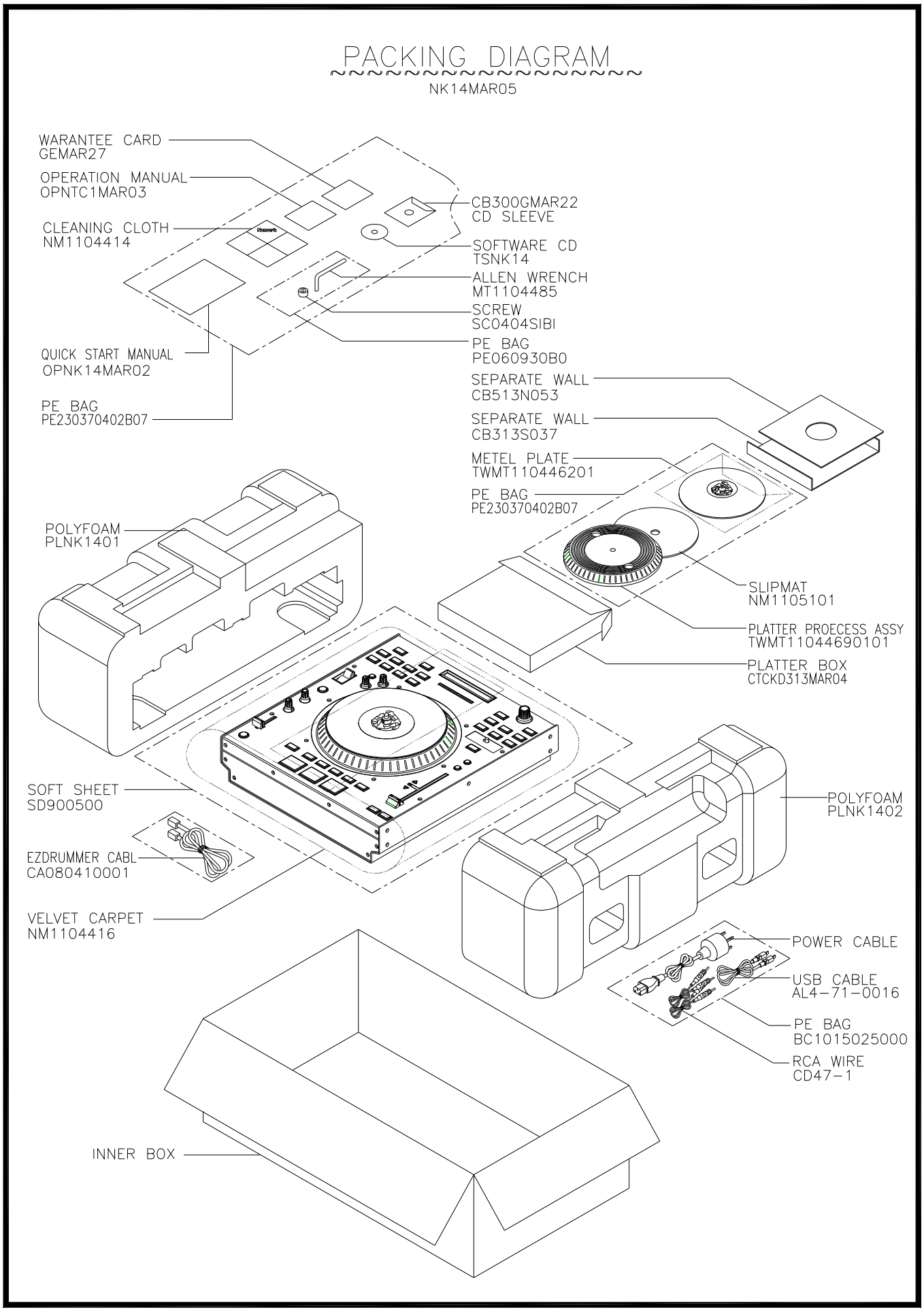

WIRING DIAGRAM

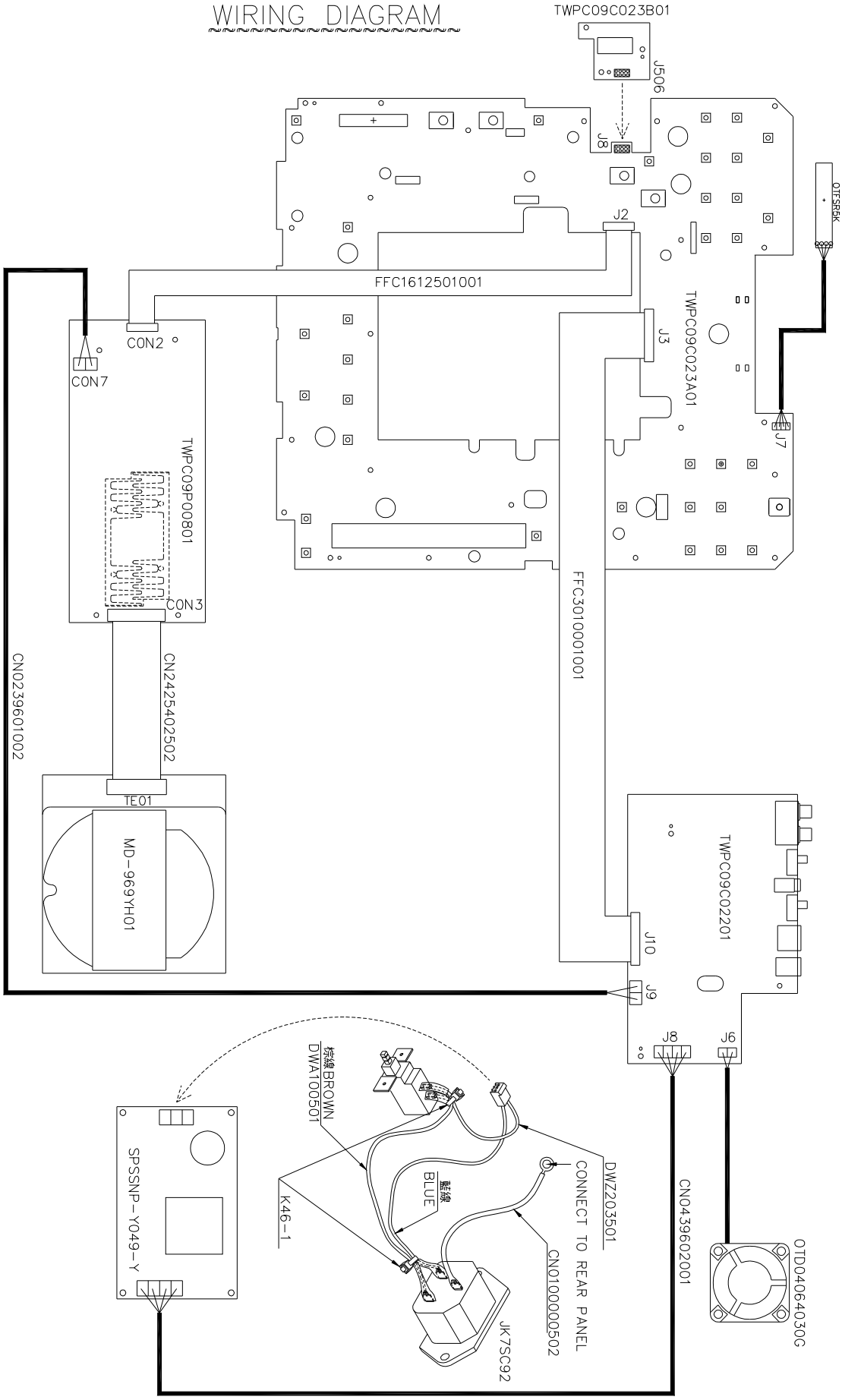

EXPLODE DIAGRAM

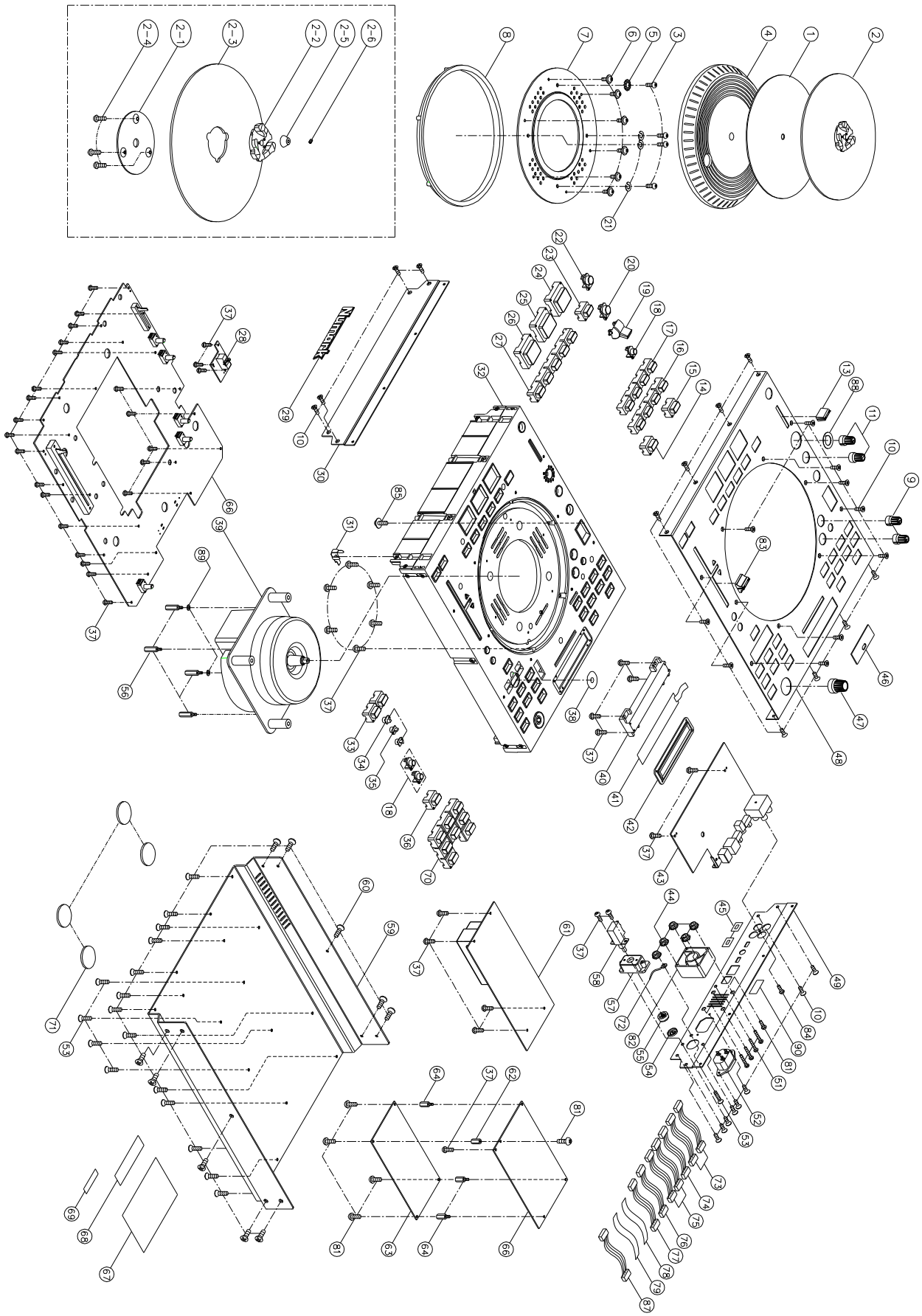

NK14MAR01 BOM

LEVEL	P/N	DESCRIPTION	QTY	REF
0.1	BAGL-55A	CABLE CLIP 55L	2	
0.1	BAGL-70L	CLIP	2	
0.1	CA080410001	Ethernet Cable	1	
0.1	CB300GMAR22	CD SLEEVE	1	
0.1	CD47-1	PHONO CORD	2	
0.1	CN0100000502	1P CONNECTOR (50mm)	1	72
0.1	CN0100000705	1P CONNECTOR (70mm)	2	73
0.1	CN0100001605	1P CONNECTOR (160mm)	1	74
0.1	CN010000502	1P CONNECTOR (50mm)	2	75
0.1	CN0239601002	2P CONNECTOR (100mm)	1	76
0.1	CN0439602501	4P CONNECTOR (250mm)	1	87
0.1	CN2425402502	24P CONNECTOR (250mm)	1	77
0.1	FFC1612501001	16P CONNECTOR (100mm)	1	78
0.1	FFC3010001001	30P CONNECTOR (100mm)	1	79
0.1	JK7SC92	AC SOCKET	1	52
0.1	K46-1	CABLE TIE	3	
0.1	LA62GMN37	DATE LABEL	1	69
0.1	LA67YH104	GND INDICATE STICKER	1	
0.1	LAC22MAR336	S/N BAR CODE LABEL	1	68
0.1	LAC56MAR381	WARNING LABEL	2	
0.1	LAC62MAR337	BAR CODE LABEL	2	
0.1	LAC63MAR338	SEFETY LABEL	1	67
0.1	LAC66MAR382	USB LABEL	1	90
0.1	LAC67YAH261	STICKER φ8MM GREEN	1	
0.1	MD-969YH01	DD MOTOR	1	39
0.1	MT1101818	METAL PLATE	1	31
0.1	MT1105522	COPPER	3	64
0.1	MT1105525	BRASS STANDOFF	4	56
0.1	MT1105529	COPPER	1	62
0.1	MT112022201	CABINET PRINTING	1	7
0.1	MT112045101	FRONT PANEL PAINTING	1	30
0.1	MT112045202	REAR PANEL PRINTING	1	49
0.1	MT113006101	FRONT PANEL (ANDOIZED PRINTING	1	48
0.1	MT113033901	BOTTOM CHASSIS PAINTING & PRIN	1	59
0.1	MT1310601	POWER BUTTON CAP	1	54
0.1	NM0704404	VELVET CARPET	2	45
0.1	NM1104412	VELVET CARPET	1	38
0.1	NP211MAR109	NAME PLATE	1	88
0.1	NP211MAR99	NAME PLATE(LEFT/RIGHT)	1	46
0.1	NP311MAR92	LOGO	1	29
0.1	NUT01030IID	NUT	5	44
0.1	OTD04064030G	DC FAN 40*40*20MM 12V	1	82
0.1	OTFSR5K	Force Sensing Resistor	1	41
0.1	PT0710620801	KNOB	1	47
0.1	PT0710621101	KNOB	2	9
0.1	PT1104412601	FIXED HOLDER(FSR)PAINTING	1	42
0.1	PT1104412701	FIXED HOLDER(TABLE)PAINTING	1	8
0.1	PT1104504	FIXED HODLER	1	40
0.1	PT1104505	FIXED HODLER	1	57
0.1	PT1110612401	VR KNOB PAINTING ABS+TPR	1	83
0.1	PT11106129	LAMPSHADE	1	35
0.1	PT1110613001	ROTATE BUTTON PAINTING	1	19
0.1	PT1110613701	KNOB	2	11
0.1	PT11106151	POWER BUTTON	1	55
0.1	PT11106178	VR KNOB PAINITING ABS+ABS	1	13
0.1	PT11106190	LAMP(△ ▽)	2	34
0.1	PT1110619633	KNOB (F/X)LASER	1	

0.1	PT1110619634	KNOB(TAP)LASER	1	
0.1	PT111068006	KNOB LASER	3	18
0.1	PT113020201	CABINET PRINTING	1	32
0.1	PW63200UC01	AC POWER SUPPLY CORD	1	
	UP301-104	AC CORD(02)		
	PW53200UK03	POWER SUPPLY CORD(03)		
	PW43200SAA01	POWER WIRE(04)		
	PW43200AR01	POWER SUPPLY CORD(05)		
	PW33200KS01	POWER SUPPLY CORD(06)		
	PW22200JIS02	POWER WIRE(07)		
0.1	RU111061501	RUBBER KNOB(CUE/PLAY)LASER ETC	1	25
0.1	RU111061502	RUBBER KNOB(PLAY)LASER ETCHING	1	26
0.1	RU111061503	RUBBER KNOB(SYNC))LASER ETCHIN	1	24
0.1	RU111061601	RUBBER KNOB(DELET)LASER ETCHIN	1	23
0.1	RU111061602	RUBBER KNOB(ON/OFF)LASER ETCHI	1	15
0.1	RU111061612	RUBBER KNOB LASER ECTING(MODE)	1	14
0.1	RU111061613	RUBBER KNOB	1	36
0.1	RU111061701	RUBBER KNOB(+/-)LASER ETCHING	1	33
0.1	RU111061801	RUBBER KNOB(ASSES KEY)LASER ET	1	27
0.1	RU111063001	RUBBER KNOB (BACK/FWD)	1	70
0.1	RU111063201	RUBBER KNOB LASER ECTING	1	17
0.1	RU111063202	RUBBER KNOB LASER ECTING(1/2X)	1	16
0.1	RU1330701	FOOT STAND	4	71
0.1	SC0305PIBI	SCREW	6	81
0.1	SC0308ABBI	SCREW(FLAT)	30	10
0.1	SC0308ABNI	SCREW	23	60
0.1	SC0308AINI	SCREW	5	53
0.1	SC0308PBBI	SCREW M3x8mm PPB TAPPING	1	84
0.1	SC0308RBNI	SCREW M3*8MM PRN TAPPING	44	37
0.1	SC0310WBNI	SCREW	6	6
0.1	SC0333PIBI	SCREW	4	51
0.1	SC0410RINI	SCREW	4	3
0.1	SC2608W10BZI	SCREW	1	
0.1	SPSSNP-Y049-Y	SWITCHING POWER(INTERNAL) 28V/	1	63
0.1	TSNK14	SOFTWARE CD	1	
0.1	TWCD6030	POWER SWITCH ASS'Y	1	58
0.1	TWMT11044690101	PLATTER PROECESS ASS'Y	1	4
0.1	WS070409IN	WASHER 4MM	3	21
0.1	WS073307IC	WASHER FLAT	2	89
0.1	WS408604505B	WASHER EXTERNAL	1	5
1	**TWPC09C02201**	**MAIN PCB ASS'Y**	**1**	**43**
2	AL0-17-0103	RESISTOR ARRAY 4X10K 1/10W	2	R25,26
2	AL0-17-0470	RESISTOR ARRAY 4X47 1/10W	3	R44,78,82
2	AL1-16-0472	ELECT 47UF/35V (L)	4	C11,73,87,100
2	AL2-50-4149	DIODE 1N4148 100V 200mA	4	D1,4,9,10
2	AL2-51-0340	DIODE POWER SCHOTTKY MBRA340T3	1	D6
2	AL2-51-4003	DIODE 300V 1A SMD	2	D7,8
2	AL2-51-4401	TRANSISTOR NPN 2N4401	1	Q6
2	AL2-51-4403	TRANSISTOR PNP 2N4403	5	Q1,7~10
2	AL2-61-0431	REG LM431 2.5V-37V 100MA	1	U15
2	AL2-72-0339	IC LM339	1	U13
2	AL2-75-4345	IC CS4345	2	U11,14
2	AL2-85-0403	IC TPS60403	1	U18
2	AL4-08-0402	CON USB 4-PIN FEMALE PC-MNT HO	1	J4
2	AL7-01-0046	CRYSTAL 12MHz 49US SMD	1	X1
2	CS101J5003NPO	CERAMIC 100P (SMD)	10	C6~10,12~16
2	CS104K5003X7R	CERAMIC 0.1UF (SMD)	49	C1~5,17,19,21,22,24~29,36~38,40,47,48,50,56,57,60~62,67,70,71,74~78,81,83,84,86,90,91,95~98,103~106
2	CS105K1603X5R	CERAMIC 1UF (SMD)	4	C18,107~109

2	CS180J5003NPO	CERAMIC 18P (SMD)	4	C20,30,45,49
2	CS200J5003NPO	CERAMIC 20P (SMD)	2	C51,58
2	DISDBAT54SSM	DIODE BAT54S 30V 0.2A	2	D2,5
2	EC22650T	ELECT 22UF/50V	14	C23,39,46,59,68,72,79,80,85,88,89,92,94,99
2	EC22735TLE	ELECT 220UF/35V LOW-ESR	4	C69,82,93,101
2	EC47525TLE	ELECT 4.7UF/25V LOW-ESR	1	C35
2	EC47625TNP	ELECT 47UF/25V Nonpolar	8	C31~34,63~66
2	EP350101	TERMINAL (ψ3.5)	1	J2
2	FCN1T1003001	30P CONNECTOR	1	(J10)
2	IC74AHCT541PWR	IC 74AHCT541PWR	1	U12
2	ICAP1501K5L	IC AP1501K5L	1	U10
2	ICBA033FP	IC BA033FP	1	U5
2	ICISP1583BS	IC ISP1583BS	1	U3
2	ICLM317S	IC LM317S	3	U9,16,17
2	ICNJM-2114M	IC NJM-2114M	2	U6,7
2	ICSN75176AD	IC SN75176AD	2	U1,2
2	ICUSBLC62SC6	IC USBLC62SC6	1	D3
2	ICYHFRC135	IC YHFRC135 (ATMEGA162)	1	U4
3	ICATMEGA162	IC ATMEGA162	1	-
2	ICYHFRC136	IC YHFRC136 (LC4032V)	1	U8
2	ICLC4032V	IC LC4032V	1	-
2	JK08002-880SE03	RJ-45 Jack 8Pin 90° Female	1	J3
2	MC33150T	METALLIZED POLYESTER FILM CAPA	4	C52~55
2	MC68150T	MALYER CAPACITOR	4	C41~44
2	MT0701816	FIX PLATE	1	(J1)
2	MT1101810	ground contact slice	1	(J2)
2	MT11044102	FIXED PLATE	1	-
2	PC09C022	MAIN PCB	1	-
2	RJ1107-09G	JACK RCA	1	J1
2	RS000004J06	RESISTOR 0Ω (SMD)	2	R47,89
2	RS000010J03	RESISTOR 0Ω (SMD)	5	R9,77,85,90,92
2	RS001004J06	RESISTOR 10Ω (SMD)	1	R91
2	RS001K10F03	RESISTOR 1K (SMD)	4	R13~16
2	RS001K10F03	RESISTOR 1K (SMD)	3	R93,98,99
2	RS001M10F03	RESISTOR 1M (SMD)	8	R1,2,5,6,11,65,105,106
2	RS004710F03	RESISTOR 47Ω (SMD)	9	R28,31,33,46,70~74
2	RS010004F06	RESISTOR 100Ω (SMD)	2	R7,32
2	RS010010F03	RESISTOR 100Ω (SMD)	1	R94
2	RS010K10F03	RESISTOR 10K (SMD)	7	R4,8,17,34~37
2	RS010K10F03	RESISTOR 10K (SMD)	10	R52~55,79~81,83,84,86
2	RS012K10F03	RESISTOR 12K (SMD)	1	R29
2	RS01K110F03	RESISTOR 1.1K (SMD)	1	R87
2	RS01K310F03	RESISTOR 1.3K (SMD)	1	R76
2	RS01K510F03	RESISTOR 1.5K (SMD)	1	R30
2	RS020K10F03	RESISTOR 20K (SMD)	4	R20~23
2	RS024310F03	RESISTOR 243Ω (SMD)	2	R75,96
2	RS03K410F03	RESISTOR 3.4K (SMD)	4	R61~64
2	RS047010F03	RESISTOR 470Ω (SMD)	1	R60
2	RS047K10F03	RESISTOR 47K (SMD)	2	R18,19
2	RS04K710F03	RESISTOR 4.7K (SMD)	8	R40~43,66~69
2	RS060410F03	RESISTOR 604Ω (SMD)	2	R10,39
2	RS082510F03	RESISTOR 825Ω (SMD)	2	R3,24
2	RS100K10F03	RESISTOR 100K (SMD)	7	R12,27,100~104
2	RS16K910F03	RESISTOR 16.9K (SMD)	5	R56~59,88
2	RS2K6710F03	RESISTOR 2.67K (SMD)	1	R95
2	RS3K0910F03	RESISTOR 3.09K (SMD)	1	R97
2	RS7K3210F03	RESISTOR 7K32 (SMD)	4	R48~51
2	SC0306RBNI	SCREW M3*6MM PRN TAPPING	1	-
2	SWVS6P001	SWITCH	2	SW1,2
2	TE512540801	8P CONNECTOR	1	(J7)

2	TE562540601	6P CONNECTOR	1	(J5)
2	TE612000202	2P CONNECTOR	1	(J6)
2	TE613960201	2P CONNECTOR	1	(J9)
2	TE613960401	4P CONNECTOR	1	(J8)
2	TR2SD2114KSM	TRANSISTOR 2SD2114KSM (SMD) (2878)	4	Q2~5
2	UH160808T-102Y	BEAD 1000Ω 100MHZ	6	L1~6
2	UHACM2012900-2P	CHOKE 90Ω 0.4A 2.0X1.2mm	1	L7
2	UHLFTBH1204-121	COMMON MODE CHOKE,121UH,3A	1	L10
2	UHSMTDRRI125-101M	INDUCTANCE (100UH/1.3A)	1	L8
2	UHSQD105T-751	Common Inductor 700Ω ±35% 10	1	L9
2	XTM11289X6	CRYSTAL 11.2896MHz (SMD)	1	X3
2	XTM16000X6	CRYSTAL 16MHz (SMD)	1	X2
1	**TWPC09C02301**	**FUNCTION PCB ASS'Y**	**1**	
2	**PC09C023**	**FUNCTION PCB**	**1**	
2	**TWPC09C023A01**	**FUNCTION PCB ASS'Y**	**1**	**66**
3	AA821786X	Oscillator 11.2896MHz	1	X3
3	AL0-09-0044	VARIABLE RESISTOR	1	P3
3	AL0-17-0103	RESISTOR ARRAY 4X10K 1/10W	2	R16,38
3	AL0-17-0470	RESISTOR ARRAY 4X47 1/10W	11	R40,64,71,73,83,86~89,109,118
3	AL1-16-0472	ELECT 47UF/35V (L)	5	C7,19,37,47,67
3	AL2-51-4401	TRANSISTOR NPN 2N4401	1	Q11
3	AL2-51-4403	TRANSISTOR PNP 2N4403	2	Q5,6
3	AL2-54-0138	TRANSISTOR BSS138	1	Q2
3	AL2-72-0339	IC LM339	2	U19,20
3	AL2-73-4053	IC CD4053	1	U8
3	AL7-20-0075	INDUCTANCE 2.2UH(SMD)	1	L3
3	CS103K5003X7R	CERAMIC 0.01UF (SMD)	4	C14,15,44,50
3	CS104K5003X7R	CERAMIC 0.1UF (SMD)	43	C1~4,11~13,17,20~28,30~34,38~42,46,48,49,52,54,55,90,91,94,96,103,137,138,142,144,146
3	CS182J5005NPO	CERAMIC 1.8nF (SMD)	1	C16
3	CS220J5003NPO	CERAMIC 22P (SMD)	2	C18,43
3	EC47525SM	ELECT 4.7UF/25V (SMD)	3	C29,35,51
3	FCN1S1000401	4P FFC CONNECTOR	1	(J7)
3	FCN1S1251602	16P FFC CONNECTOR	1	(J2)
3	FCN1T1003001	30P FFC CONNECTOR	1	(J3)
3	IC74ACT574PW	IC 74ACT574PW	9	U1~3,6,7,9,10,21,24
3	IC74AHC245PW	IC SN74AHC245PWR	1	U30
3	ICBA033FP	IC BA033FP	1	U38
3	ICLM317S	IC LM317S	1	U16
3	ICYHFRC137	IC YHFRC137 (AL2-70-3433)	1	U5
4	AL2-70-3433	AL2-70-3433	1	-
3	ICYHFRC138	IC YHFRC138 (AL2-80-0256)	1	U4
4	AL2-80-0256	AL2-80-0256	1	-
3	LD-005HLV	RED LED	50	LED1~9,12,13,15,17~20,22,23,28~31,33,37,38~42,44,45,47,49,51,52,56,61,64,65,68~73,78,80,105~107
3	LD304W2CB	WHITE LED	22	LED10,11,14,16,21,24,26,27,34~36,43,46,48,50,53~55,57,66,67,82
3	LDKPT-2012SECJ3	RED LED (SMD)	11	LED79,81,83~91
3	LDYH-11R5W1R5	LED BAR	1	(LED25,32,58~60,62,63,74~77)
3	MT070446701	IRON PLATE	2	(E1,3)
3	MT1104473	FIXED PLATE	2	(P12)
3	NM3506103	VELET CARPET	1	(P5)
3	PT111048005	FIXED BASE,LED	72	(LED1~24,26~31,33~57,61,64~73,78,80,82,105~107)
3	RS000008J05	RESISTOR 0Ω (SMD)	1	R150
3	RS000010J03	RESISTOR 0Ω (SMD)	3	C86,R124,135
3	RS001K10F03	RESISTOR 1K (SMD)	4	R39,77,126,145
3	RS004710F03	RESISTOR 47Ω (SMD)	5	R84,85,90,167,168
3	RS010K10F03	RESISTOR 10K (SMD)	11	R3,4,9,13,32,80,81,143,157,161,162
3	RS018010F03	RESISTOR 180Ω (SMD)	15	R41,54,65,66,169~179
3	RS01K810F03	RESISTOR 1.8K (SMD)	1	R12

3	RS020010F03	RESISTOR 200Ω (SMD)	1	R146
3	RS020K10F03	RESISTOR 20K (SMD)	6	R159,160,180~183
3	RS022010F03	RESISTOR 220Ω (SMD)	28	R14,17,18,51,69,72,74,75,78,82,92~95,98,100~105,110,117,133,136,138,140,142
3	RS027010F03	RESISTOR 270Ω (SMD)	12	R31,33,37,49,55~57,59~61,128,131
3	RS033010F03	RESISTOR 330Ω (SMD)	16	R50,67,68,70,76,96,97,99,107,112,129,132,134,137,139,141
3	RS03K310F03	RESISTOR 3.3K (SMD)	11	R79,91,106,108,113~115,119,121,123,127
3	RS047010F03	RESISTOR 470Ω (SMD)	25	R8,11,19,25~30,42~46,48,111,116,120,125,151~156
3	RS056010F03	RESISTOR 560Ω (SMD)	2	R122,149
3	RS100K10F03	RESISTOR 100K (SMD)	6	R23,47,52,53,58,147
3	RS1K6210F03	RESISTOR 1.62K (SMD)	1	R144
3	RS22K110F03	RESISTOR 22.1K (SMD)	1	R130
3	SC2606RINI	SCREW	2	(P12)
3	SWDC11B2021431	SWITCH	2	E1,3
3	SWEVQ11L05R	Switch Tact Stem Height 5mm Op	35	S1~8,10~12,14~17,20~31,42~48,65
3	SWSSFUB22-10K	Switch Slide Single Row 180°	1	S9
3	TE512540801	8P CONNECTOR	1	(J1)
3	TE962540801	8P CONNECTOR	1	(J505)
3	TE962541401	14P CONNECTOR	1	(J16)
3	VRR10301301	Potentiometer Rotary 10k Shaft	2	P1,2
3	VRS10303006	Potentiometer Slide 10k 15mm	1	P12
3	VRS10310013	Potentiometer Rotary Valume 10	1	P5
3	XTM40000X4	Crystal 40MHz 49US DIP Fundame	1	X1
2	**TWPC09C023B01**	**Bleep/Reverse PCB ASSY**	**1**	**28**
3	SWLBCR23M-095	SWITCH	1	S49
3	TE562540803	8P CONNECTOR	1	(J1)
2	**TWPC09C023C01**	**SHIELD PCB ASS'Y**	**1**	
1	**TWPC09P00801**	**MOTOR CONTRON PCB ASS'Y**	**1**	**61**
2	CC104100Z	CERAMIC 0.1UF/100V	1	C39
2	CS102K5005X7R	CERAMIC 1nF (SMD)	3	C9,41,42
2	CS103K5005X7R	CERAMIC 0.01UF (SMD)	1	C54
2	CS104Z5005Y5V	CERAMIC 0.1UF (SMD)	26	C1,2,7,8,14,16~26,32~35,37,44,48,57,58,59
2	CS200J5005NPO	CERAMIC 20P (SMD)	2	C5,6
2	CS334K1605X7R	CERAMIC 0.33UF (SMD)	1	C3
2	CS682K5005X7R	CERAMIC 6.8nF (SMD)	1	C4
2	DIN5406	DIODE DIN5406	1	D3
2	DISR26	SCHOTTKY BARRIER RECTIFIER	1	D01
2	DIZDP6SMB47CAT3	DIODE TVS (47V)	2	ZD01,02
2	EC10616T	ELECT 10UF/16V	2	C12,15
2	EC10716T	ELECT 100UF/16V	1	C36
2	EC10850	ELECT 1000UF/50V	1	C38
2	EC33725TLE	ELECT 330UF/25V LOW-ESR	1	C30
2	EC33750T	ELECT 330UF/50V	1	C11
2	EC47550T	ELECT 4.7UF/50V	3	C27,28,29
2	EC47616T	ELECT 47UF/16V	1	C13
2	FCN1S1251602	16P CONNECTOR	1	CON02
2	IC74AHC245PW	IC 74AHC245PWR	1	U2
2	ICAP1501K5L	IC AP1501K5L	1	IC2
2	ICAPL1117-33V	IC APL1117-33V	1	IC3
2	ICBA4558F	IC BA4558F	1	IC8
2	ICMIC809	IC MIC809	1	IC4
2	ICOPA354	IC OPA354	1	IC1
2	ICYH08P01	IC YH08P01 (ICTMS320LF2407A)	1	IC5
3	ICTMS320LF2407A	IC TMS320LF2407A	1	-
2	MOF01003	M.RES 1Ω 3W	1	R47
2	MT0703321	FIXED PLATE	2	-

2	NP211MAR79	NAME PLATE	1	-
2	PC09P008	MOTOR CONTRON	1	-
2	R10112	RESISTOR 100Ω	3	R20,29,38
2	RS000004J06	RESISTOR 0Ω (SMD)	1	R11
2	RS001608F05	RESISTOR 16Ω (SMD)	1	R8
2	RS001K08F05	RESISTOR 1K (SMD)	18	R14,17,19,24,28,32,37,46,51,55,59,63,68~70,75,115,118
2	RS001M08F05	RESISTOR 1M (SMD)	1	R21
2	RS010K08F05	RESISTOR 10K (SMD)	30	R1~7,9,10,12,16,22,26,30,31,35,40,44,48,53,56,61,94~98,110,112,116
2	RS02K208F05	RESISTOR 2.2K (SMD)	2	R93,114
2	RS033K08F05	RESISTOR 33K (SMD)	4	R78,79,86,91
2	RS03K308F05	RESISTOR 3.3K (SMD)	1	R117
2	RS03K908F05	RESISTOR 3K9 (SMD)	6	R13,23,33,42,50,58
2	RS04K708F05	RESISTOR 4.7K (SMD)	6	R15,25,34,43,52,60
2	RS06K808F05	RESISTOR 6.8K (SMD)	7	R18,27,36,45,54,62,111
2	RS100K08F05	RESISTOR 100K 1% (SMD)	1	R113
2	RS1K0508F05	RESISTOR 1.05K (SMD)	1	R65
2	RS3K2408F05	RESISTOR 3.24K (SMD)	1	R64
2	SC0308RBNI	SCREW M3*8MM PRN TAPPING	6	-
2	SC3508RBNI	SCREW	4	-
2	TE613960201	2P CONNECTOR	1	CON7
2	TE962541401	14P CONNECTOR	1	CON1
2	TE962542401	24P CONNECTOR	1	CON3
2	TR2SA1037ASM	TRANSISTOR 2SA1037ASM (SMD) (608)	1	Q43
2	TR2SB1340-T-B	TRANSISTOR 2SB1340-T-B (1340)	3	Q6,11,16
2	TR2SC2412KSM	TRANSISTOR 2SC2412KSM (SMD) (536)	1	Q39
2	TR2SD1889	TRANSISTOR 2SD1889	3	Q23,28,33
2	TRIRLML5103	TRANSISTOR IRLML5103	6	Q4,9,14,21,26,31
2	TRRK7002	TRANSISTOR RK7002	18	Q2,3,5,7,8,10,12,13,15,19,20,22,24,25,27,29,30,32
2	UH322522T-100K	CHOKE COIL 100UH	2	L1,2
2	UH453232T-3R3K	CAPACITOR	2	L4,5
2	UHPID1207-680M	Inductor 68uH±20% 3A SMD	1	L3
2	XTM08000X6F1	CRYSTAL 8MHz 49US (SMD)	1	Y2
1	**MD-969YH01**	**DD MOTOR**	**2**	
2	**TWPC08P00301**	**MOTOR PCB ASS'Y**	**1**	
2	**PC08P003**	**MOTOR PCB SINGLE LAYER FR1(146**	**1**	
3	**TWPC08P003A01**	**MOTOR PCB ASS'Y**	**1**	
4	CS104Z5005Y5V	CEAMIC 0.1UF (SMD)	5	C48,49,81,82,83
4	HSEW510	HALL SENSOR IC EW510	3	HS100,101,102
4	JW5206T	JUMP WIRE	4	J1,2,3,4
4	RS000008J05	RESISTOR 0Ω (SMD)	7	R84,85,86,87,88,89,90
4	RS010K08F05	RESISTOR 10K (SMD)	3	R81,82,83
4	TE612000402	4P CONNECTOR	1	CON8
4	TE612000403	4P CONNECTOR	1	CON9
4	TE962542401	24P CONNECTOR	1	TE01
3	**TWPC08P003B01**	**OPTICAL ENCODER PCB ASS'Y**	**1**	
4	CN0420000704	4P CONNECTOR (70mm)	1	CON10
4	CS104Z5005Y5V	CERAMIC 0.1UF (SMD)	1	C51
4	DIHEDS-9700F50	SENSOR	1	PH1
4	JW5206T	JUMP WIRE	1	J5
3	**TWPC08P003C01**	**OPTICAL ENCODER PCB ASS'Y**	**1**	
4	CN0420001302	4P CONNECTOR (130mm)	1	CON11
4	CS104Z5005Y5V	CERAMIC 0.1UF (SMD)	1	C52
4	DIHEDS-9700F50	SENSOR	1	PH2
4	JW5206T	JUMP WIRE	1	J6

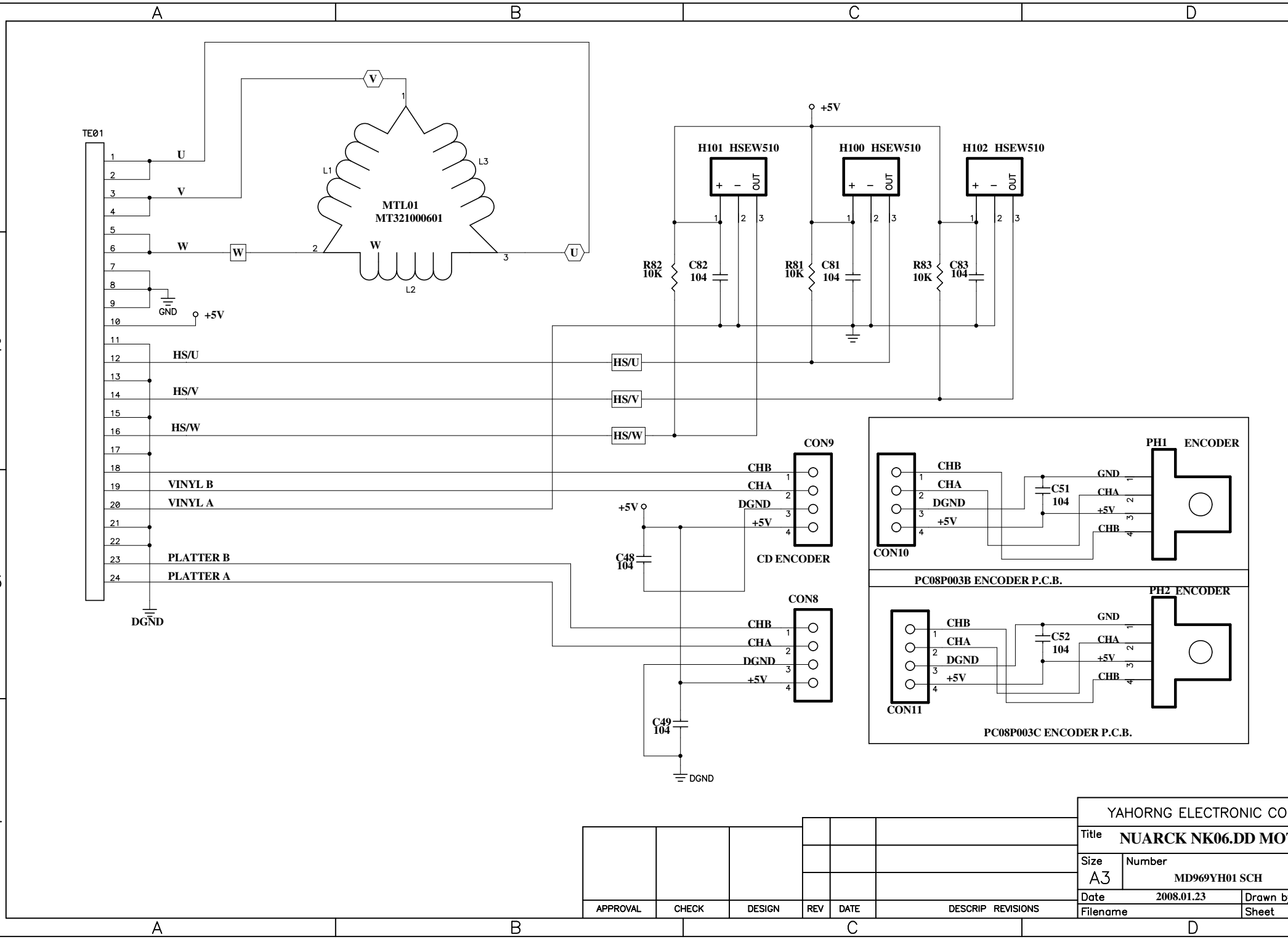
TE01
U
V
W
GND
+5V
HS/U
HS/V
HS/W
VINYL B
VINYL A
PLATTER B
PLATTER A
DGND
MTL01
MT321000601
L1
L2
L3
H101 HSEW510
H100 HSEW510
H102 HSEW510
OUT
R82 10K
C82 104
R81 10K
C81 104
R83 10K
C83 104
CON9
CHB
CHA
DGND
+5V
CD ENCODER
C48 104
CON8
C49 104
CON10
C51 104
PH1 ENCODER
PC08P003B ENCODER P.C.B.
CON11
C52 104
PH2 ENCODER
PC08P003C ENCODER P.C.B.
YAHORNG ELECTRONIC CO
Title
NUARCK NK06.DD MO
Size
A3
Number
MD969YH01 SCH
Date
2008.01.23
Drawn b
Filename
Sheet
APPROVAL
CHECK
DESIGN
REV
DATE
DESCRIP REVISIONS

CON10
CON11
PH1 PC08P003B
PH2 PC08P003C
J5
J6
J1
J3
J2
J4
CON9
CON8
TE01
CHA
CHB
LU
LV
LW
HS100
HS101
HS102
PC08P003A
PC08P003B
PC08P003C
2008.06.30

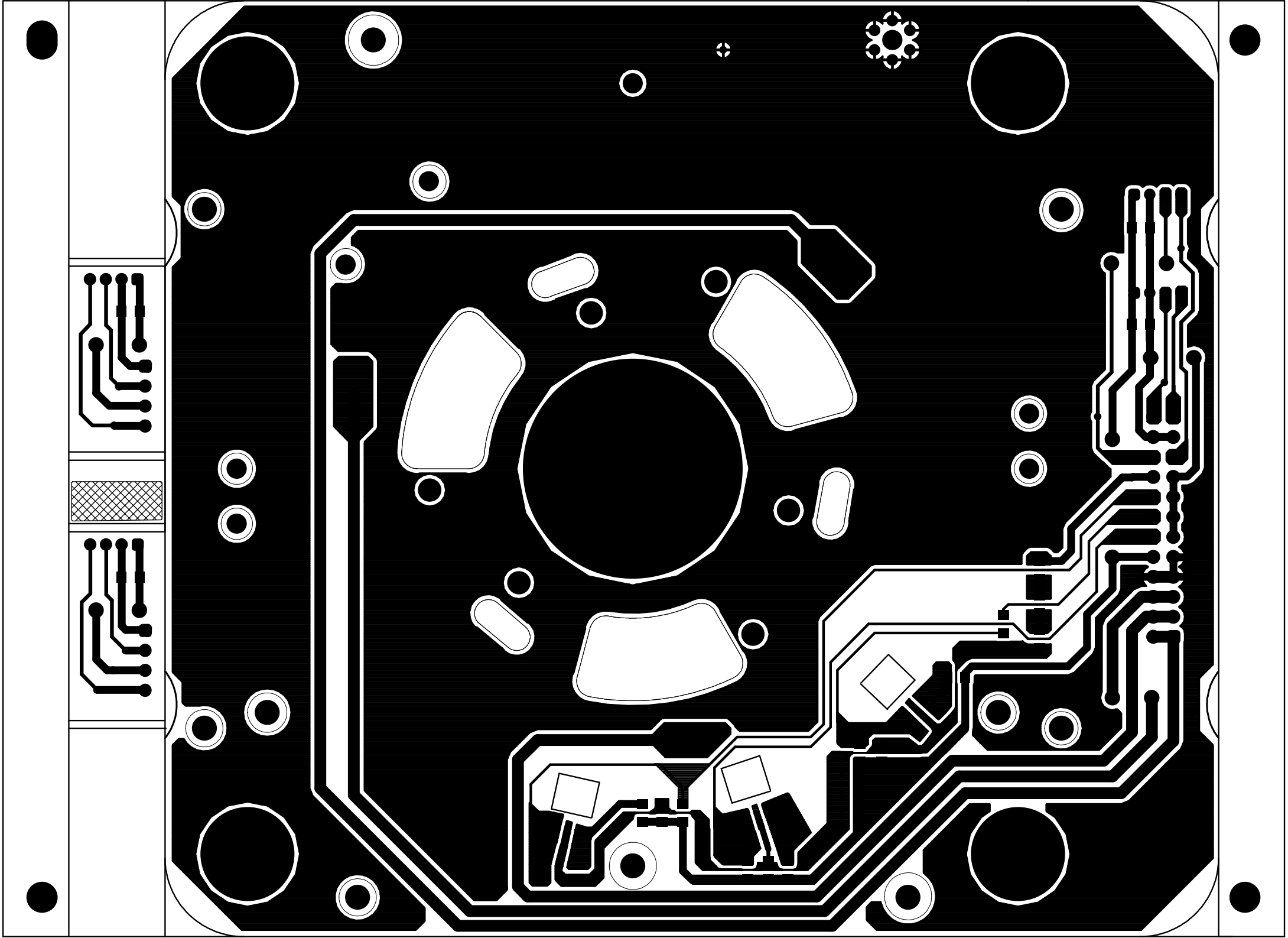

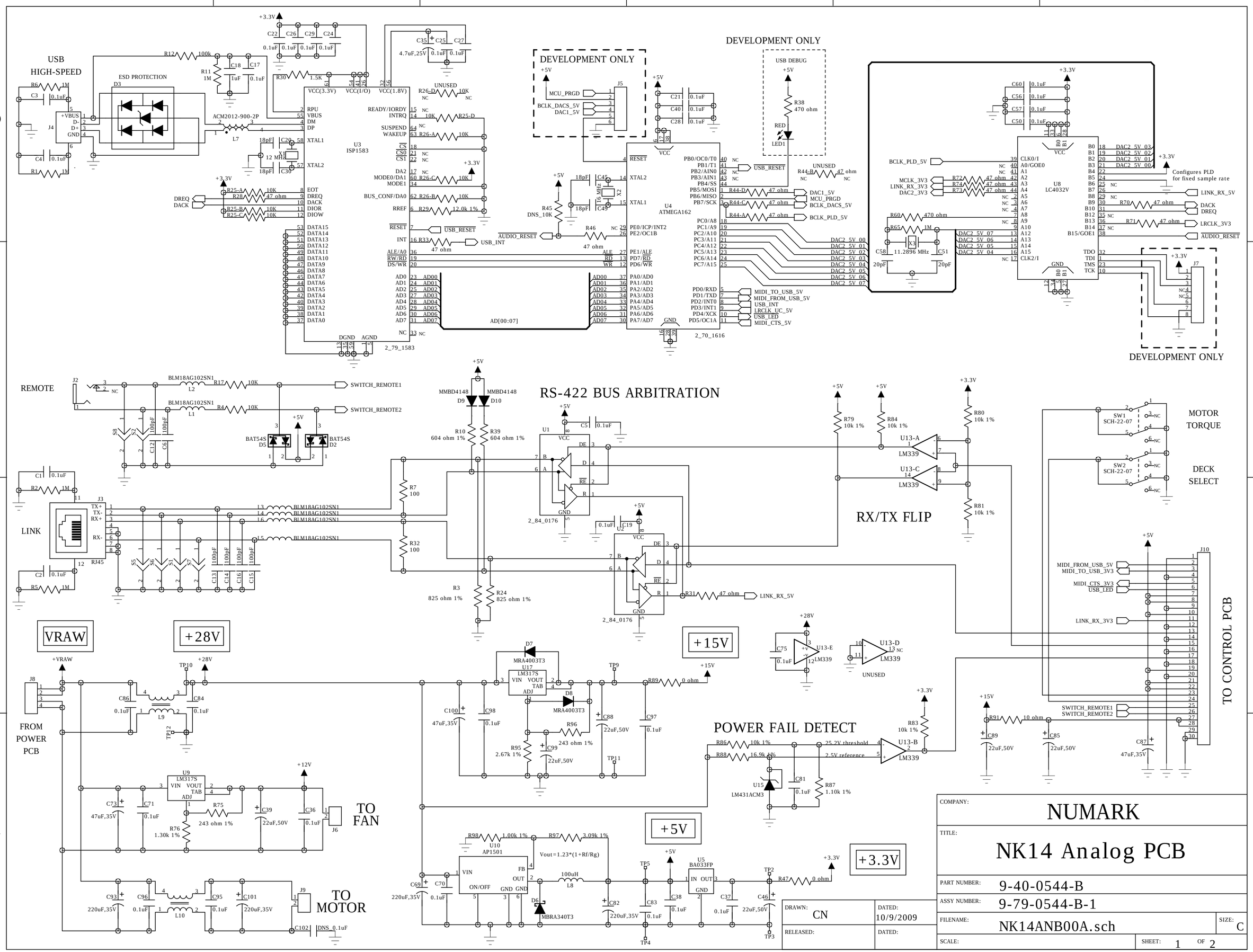
USB HIGH-SPEED
ESD PROTECTION
ACM2012-900-2P
U3 ISP1583
2_79_1583
DEVELOPMENT ONLY
USB DEBUG
U4 ATMEGA162
2_70_1616
U8 LC4032V
Configures PLD for fixed sample rate
REMOTE
SWITCH_REMOTE1
SWITCH_REMOTE2
LINK
RJ45
RS-422 BUS ARBITRATION
2_84_0176
RX/TX FLIP
LM339
MOTOR TORQUE
DECK SELECT
TO CONTROL PCB
VRAW
+28V
+15V
+5V
+3.3V
FROM POWER PCB
POWER FAIL DETECT
LM431ACM3
TO FAN
TO MOTOR
AP1501
BA033FP
LM317S
COMPANY: NUMARK
TITLE: NK14 Analog PCB
PART NUMBER: 9-40-0544-B
ASSY NUMBER: 9-79-0544-B-1
FILENAME: NK14ANB00A.sch
SIZE: C
SCALE:
SHEET: 1 OF 2
DRAWN: CN
DATED: 10/9/2009
RELEASED:
DATED:

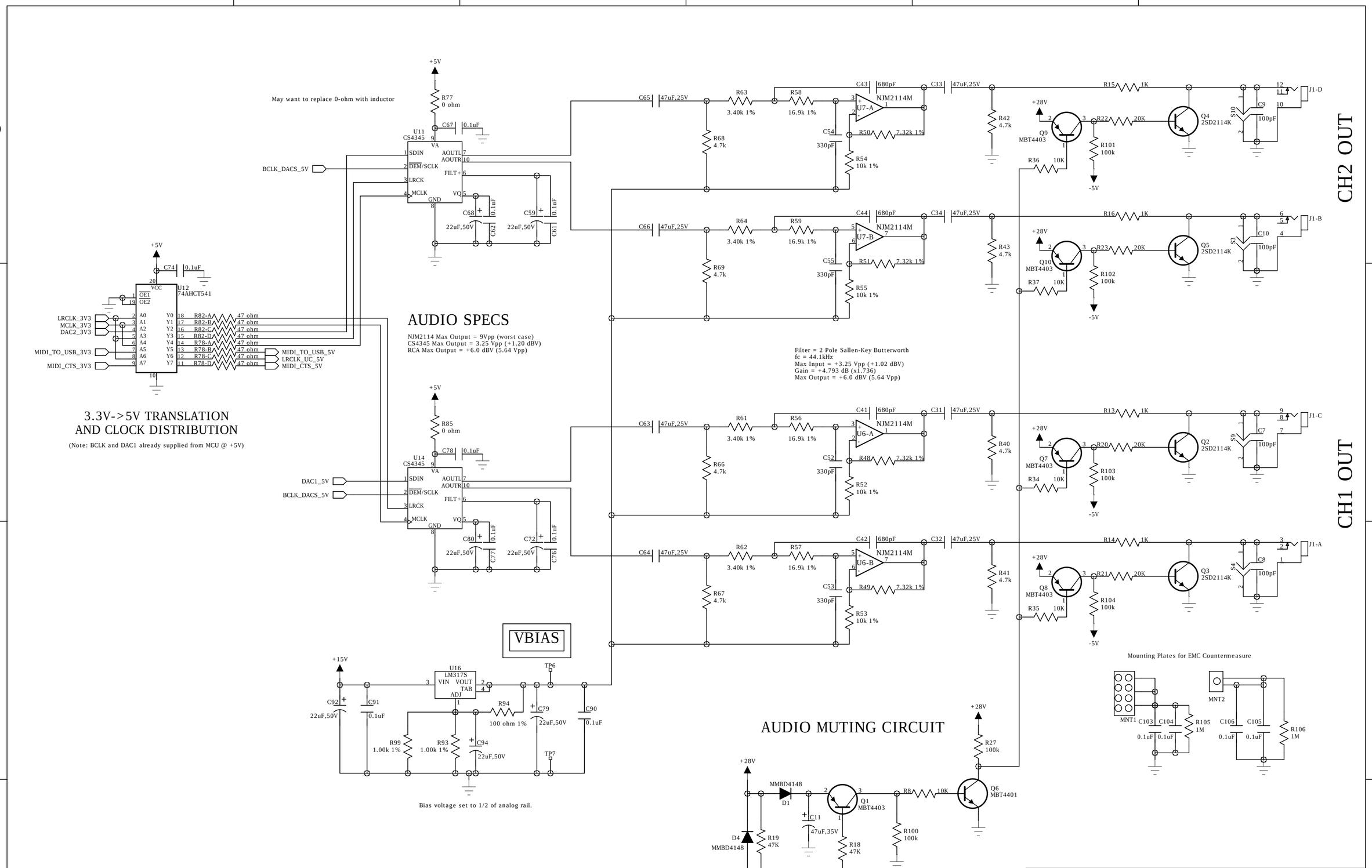

COMPANY:	NUMARK
TITLE:	NK14 Analog PCB
PART NUMBER:	9-40-0544-B
ASSY NUMBER:	9-79-0544-B-1
FILENAME:	NK14ANB00A.sch
SIZE:	C
SCALE:	
SHEET:	2 OF 2
DRAWN:	CN
DATED:	10/9/2009
RELEASED:	
DATED:	

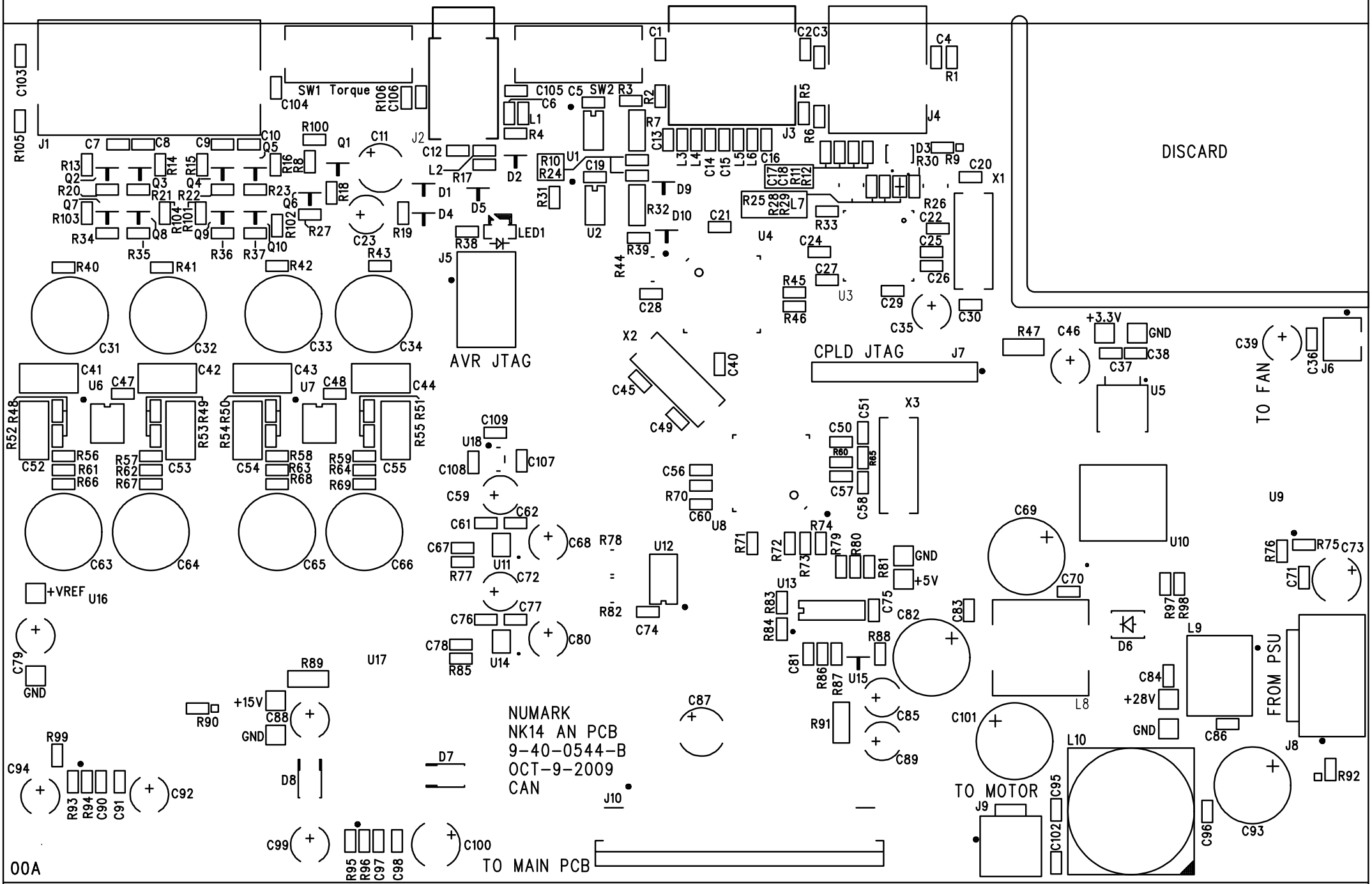
DISCARD
SW1 Torque
AVR JTAG
CPLD JTAG
TO FAN
FROM PSU
TO MOTOR
TO MAIN PCB
NUMARK
NK14 AN PCB
9-40-0544-B
OCT-9-2009
CAN
+3.3V
GND
+5V
+28V
+15V
+VREF
00A

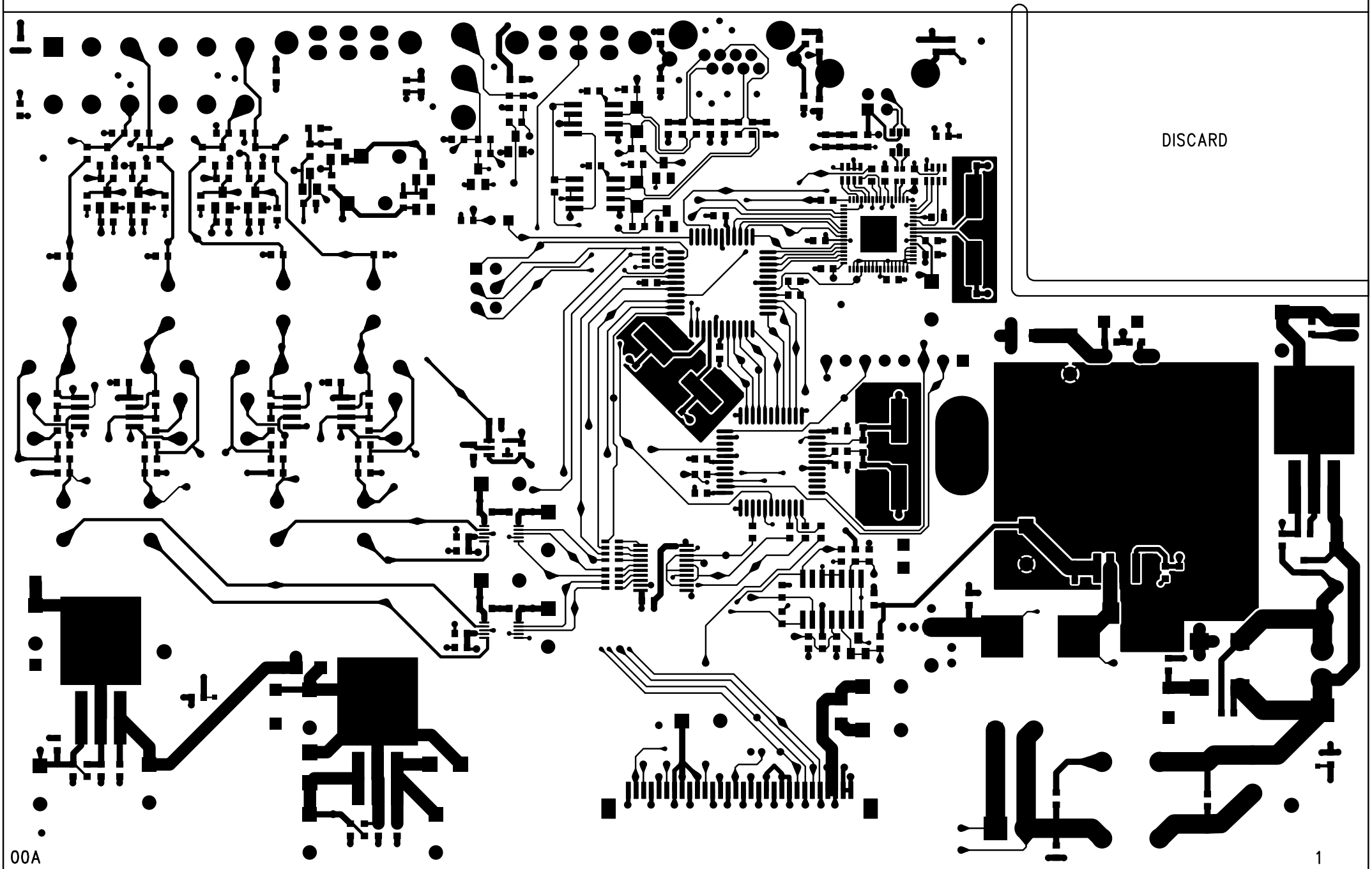
DISCARD
00A
1

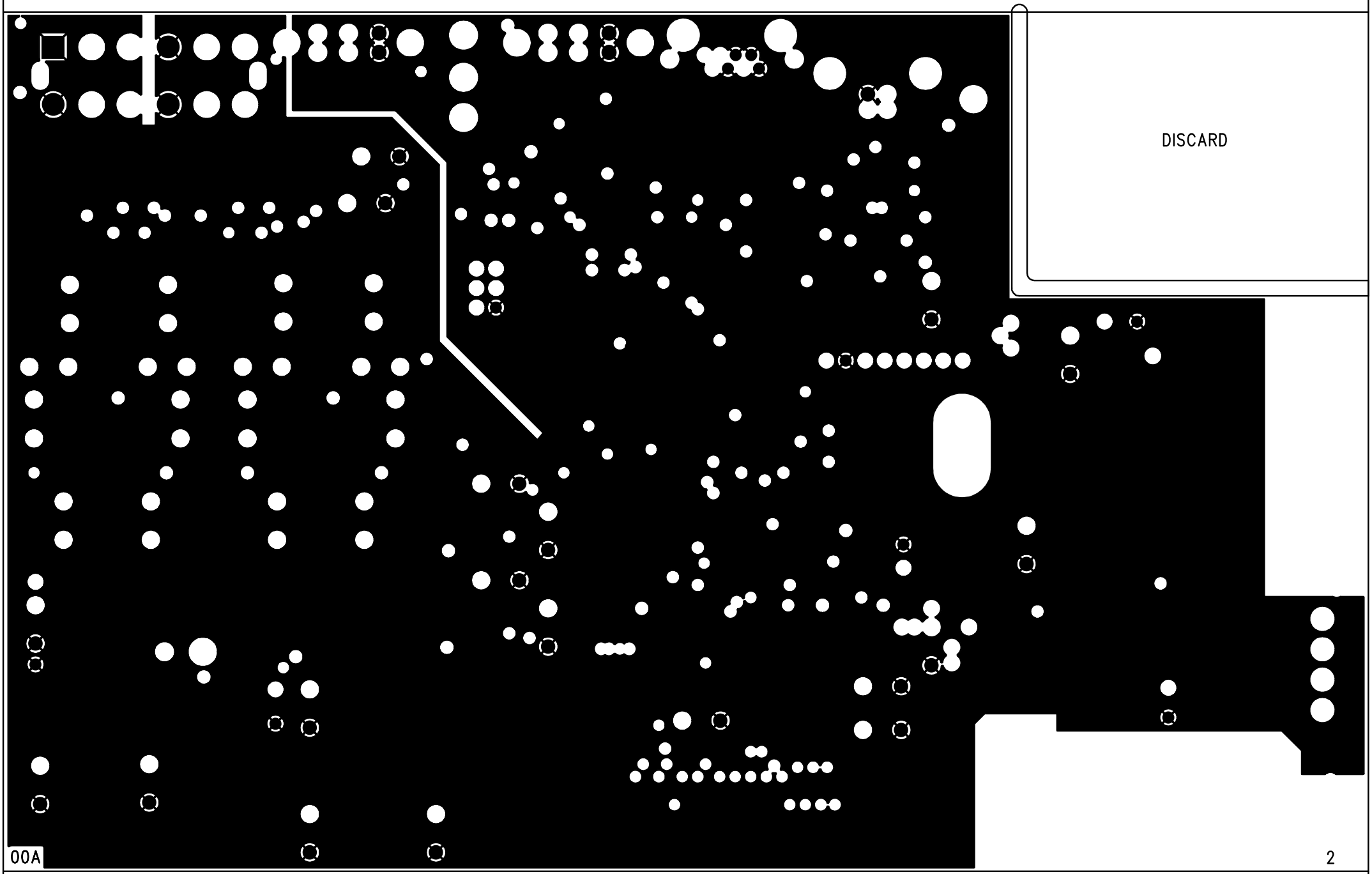
DISCARD
00A
2

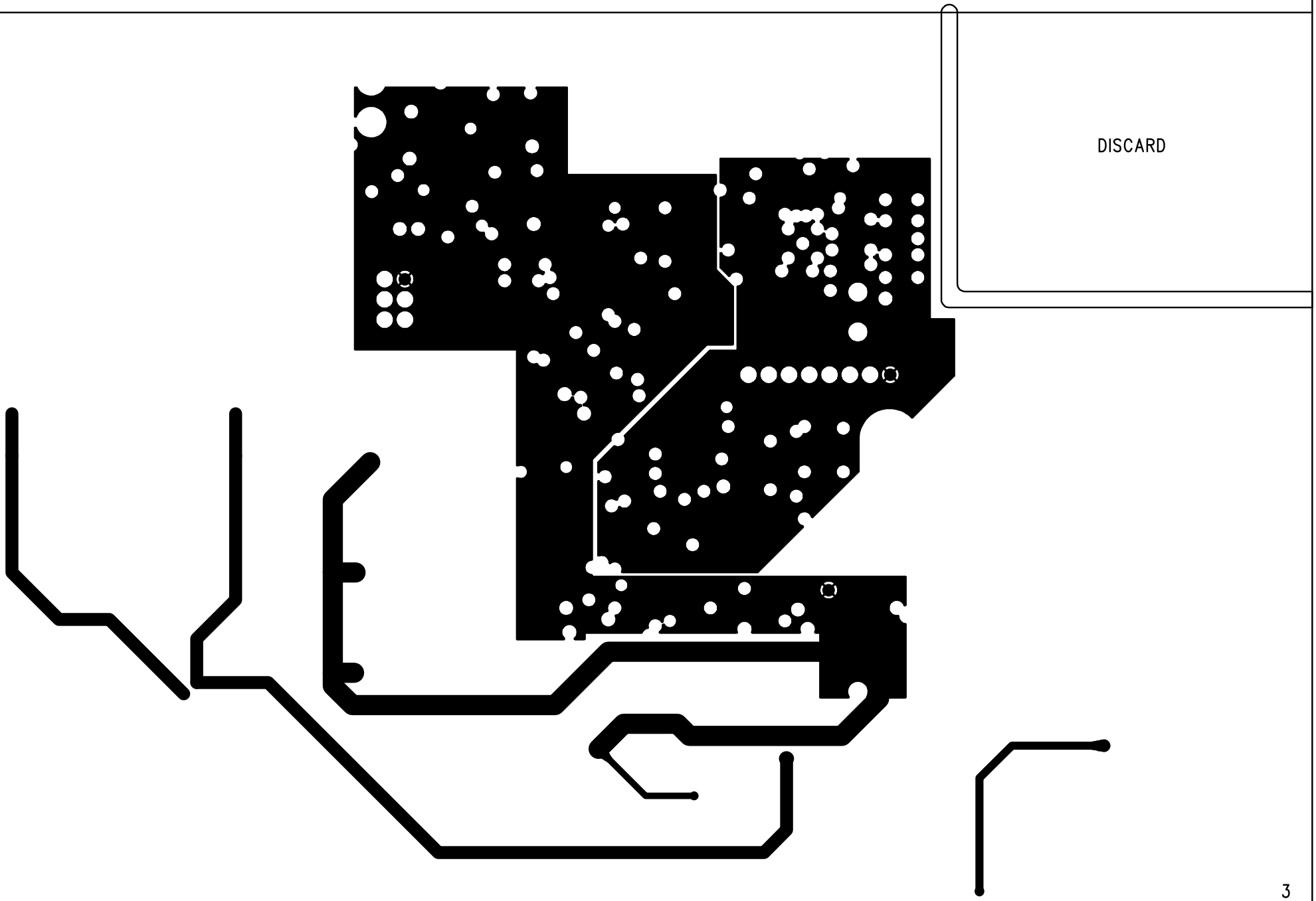
DISCARD

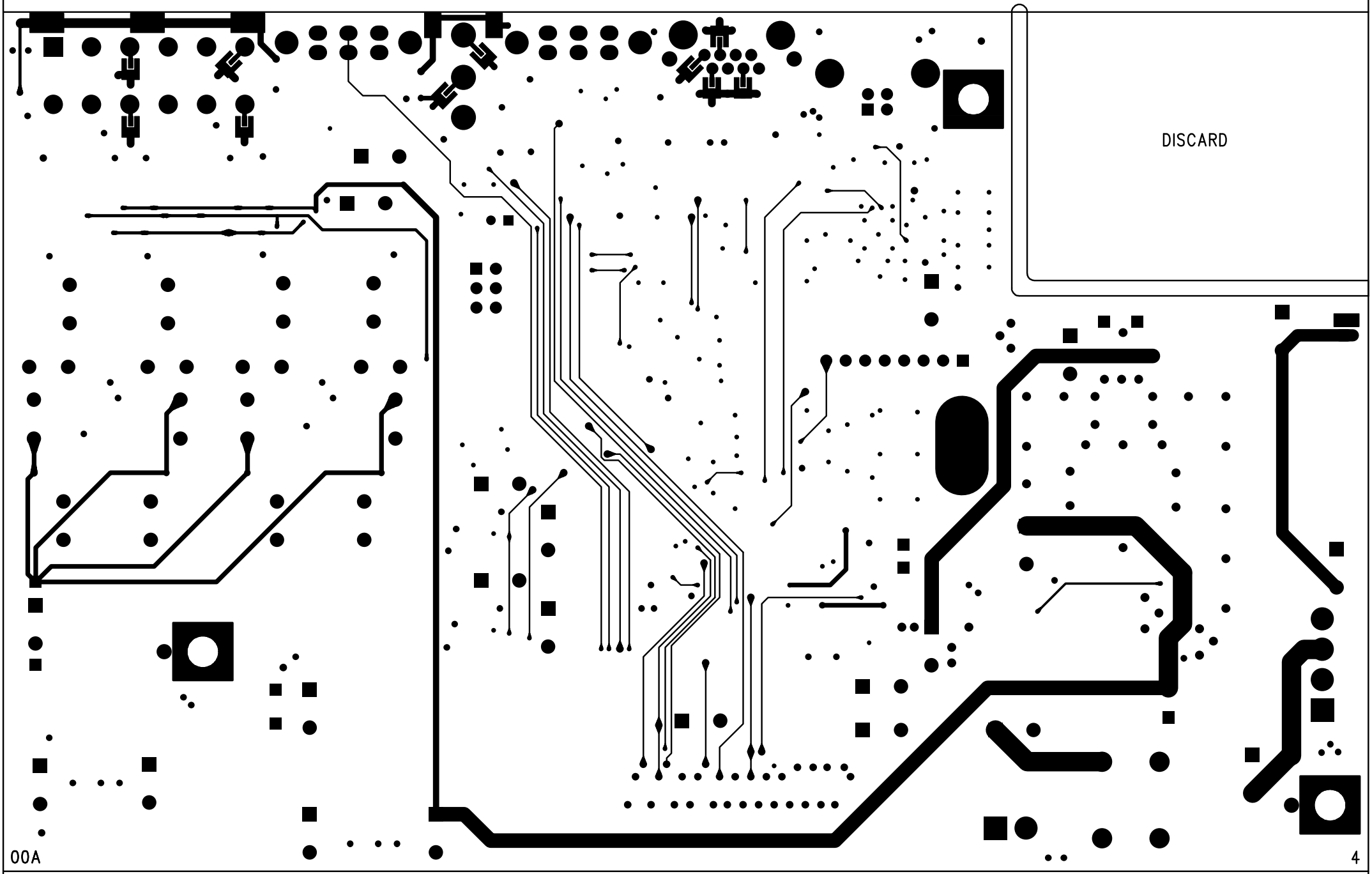
DISCARD
00A
4

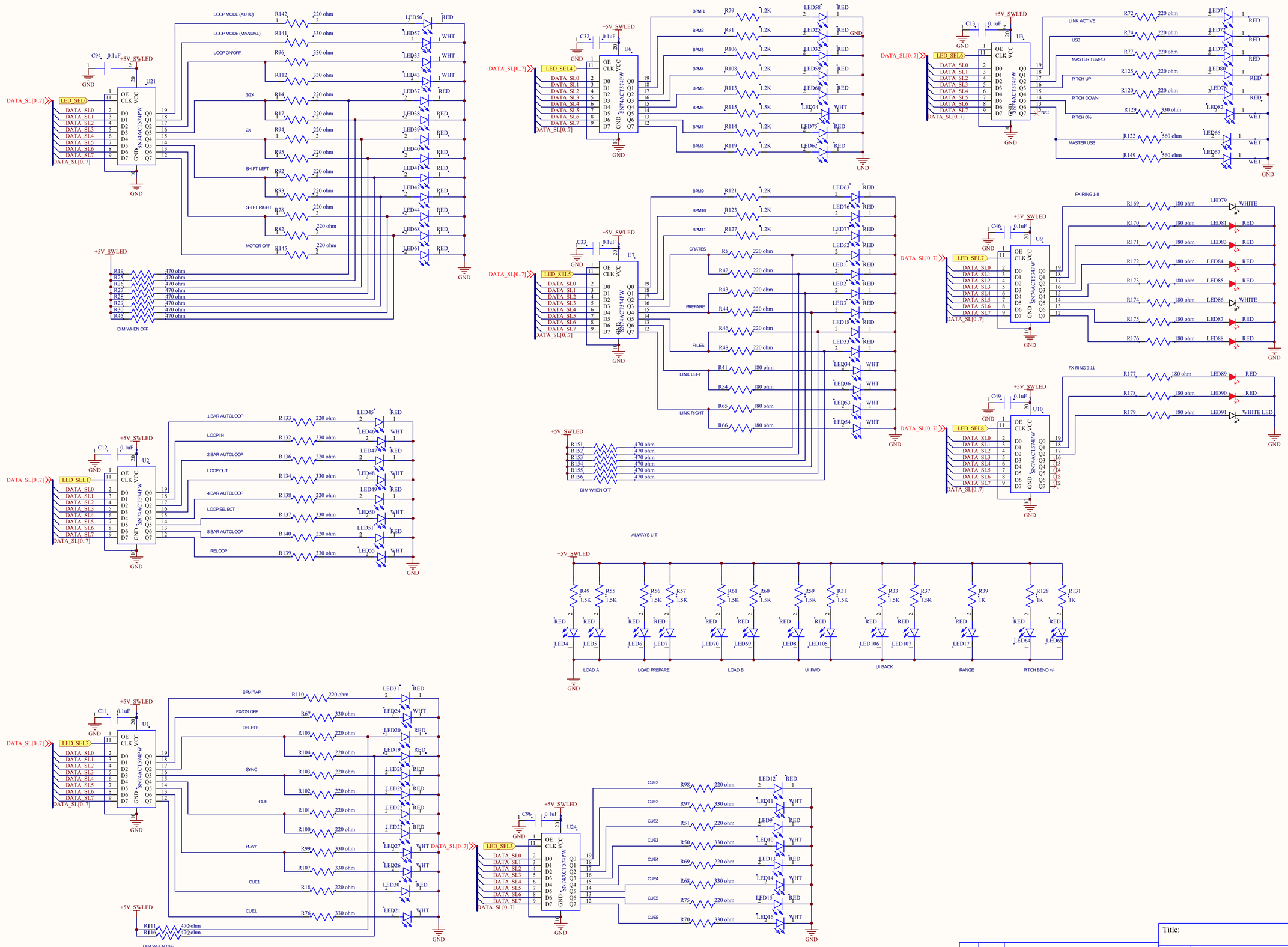

Approval	Check	Design	REV	DATE	Description	Title:		
						Size A2	Number	Revision
						Date : 06/11/2009	Sheet of	
						File Name:	Design By :	

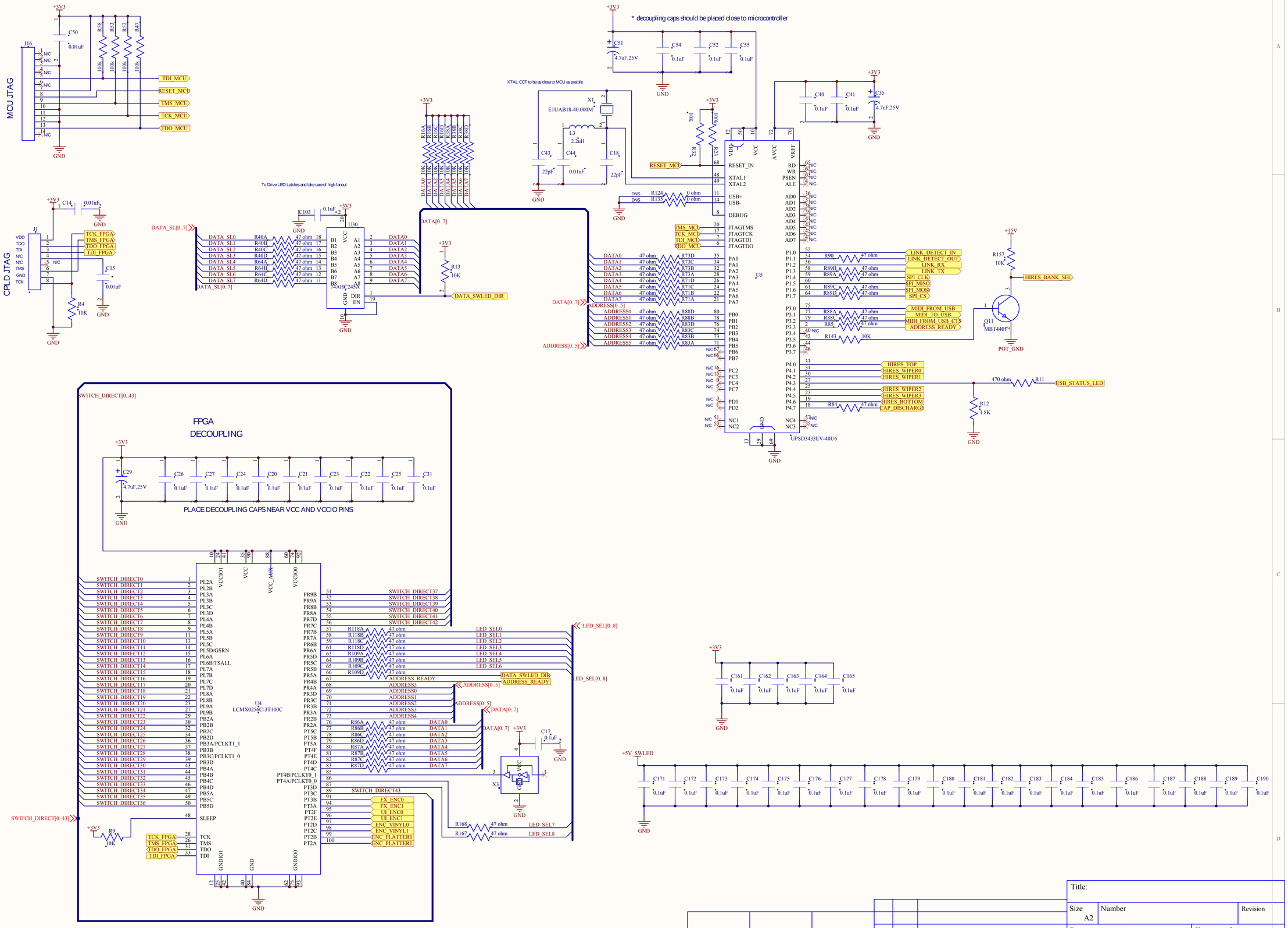

Title:			
Size A2	Number		Revision
Date : 06/2/2009		Sheet of	
File Name:		Design By :	

Approval	Check	Design	REV	DATE	Description

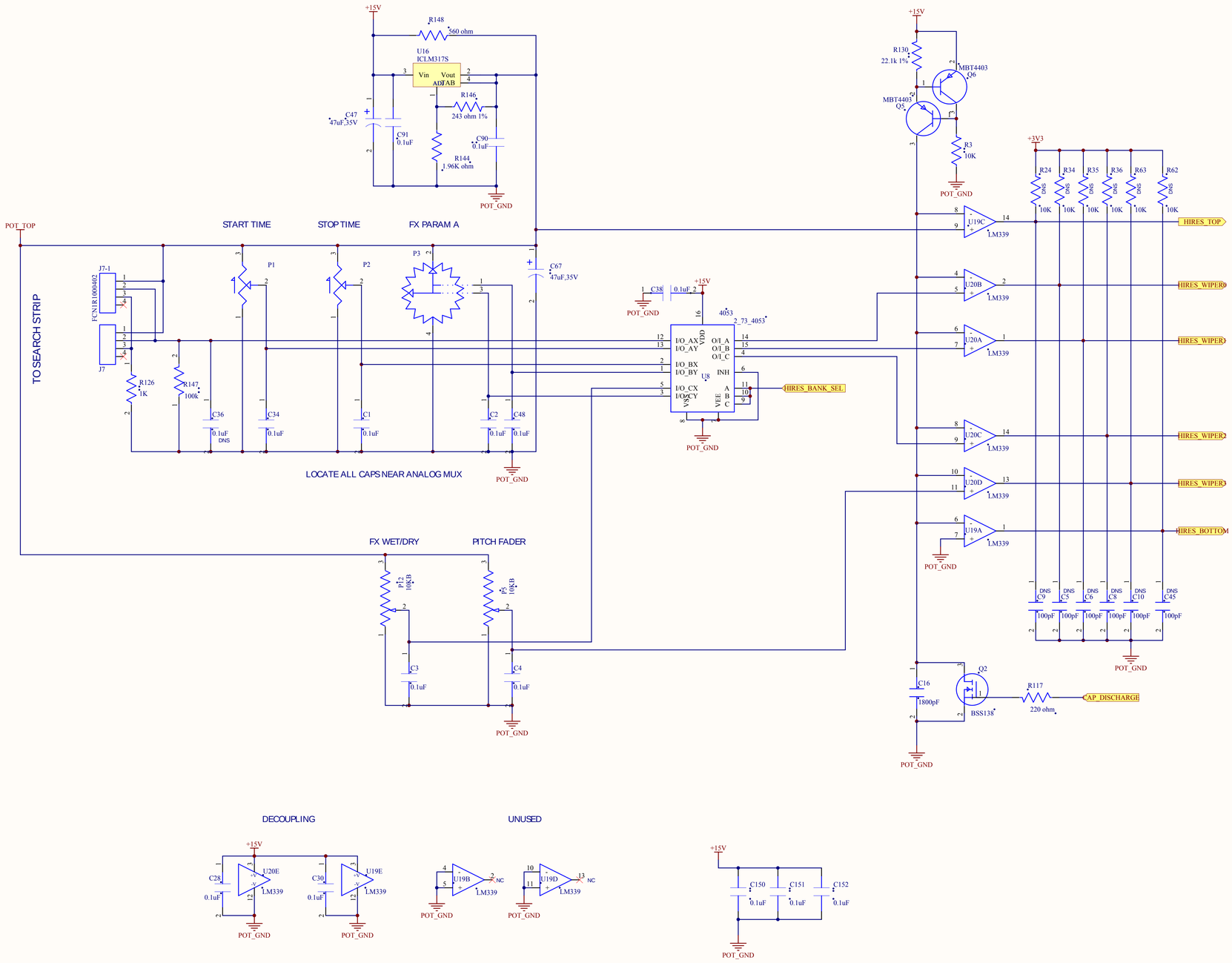

Title:			
Size A2	Number		Revision
Date : 06/02/2009		Sheet of	
File Name:		Design By :	

Approval	Check	Design	REV	DATE	Description

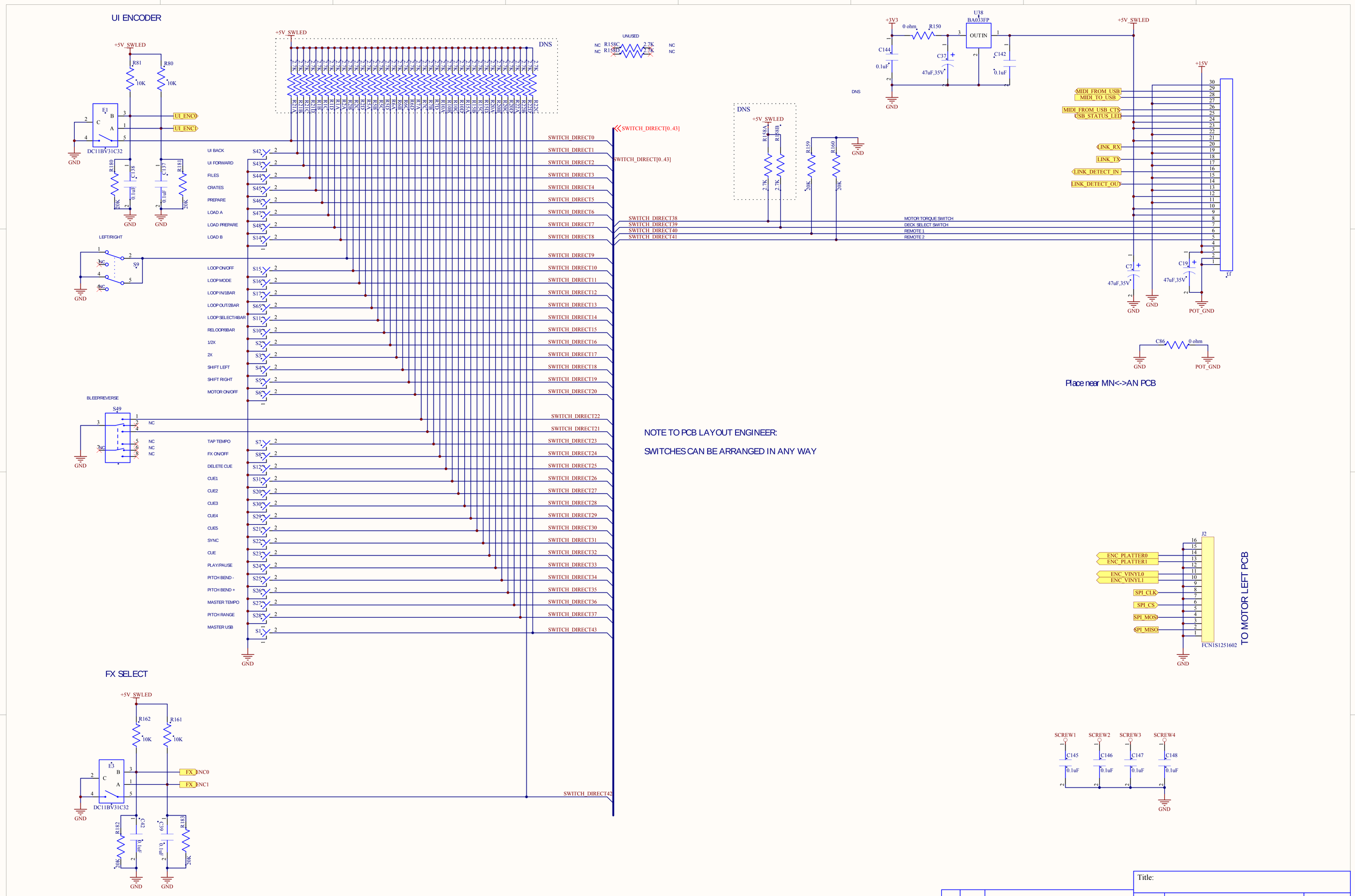

Title:			
Size A2	Number		Revision
Date : 12/09/2009		Sheet of	
File Name:		Design By :	

Approval	Check	Design	REV	DATE	Description

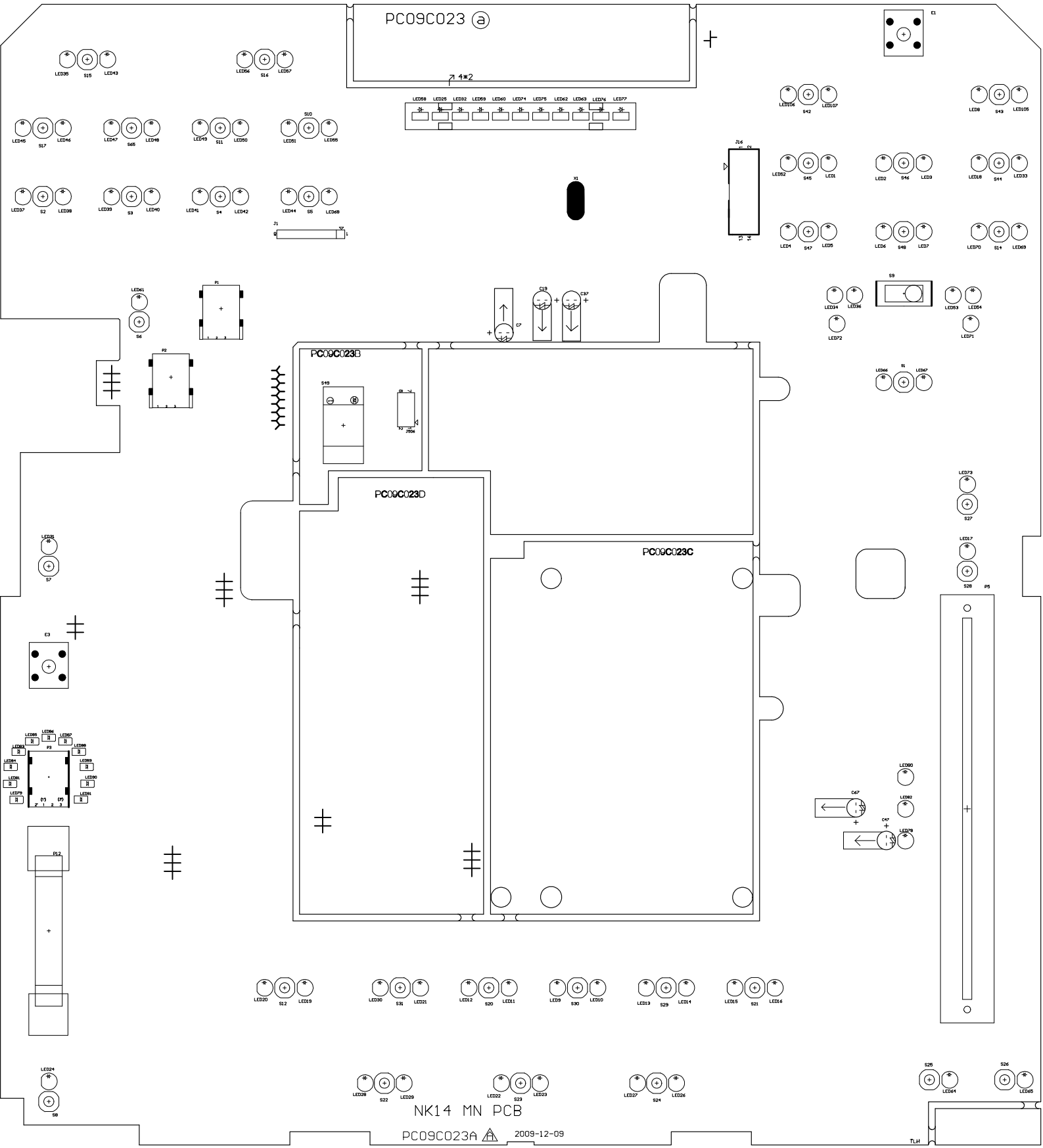
PC09C023 ⓐ
4*2
PC09C023B
PC09C023D
PC09C023C
NK14 MN PCB
PC09C023A A 2009-12-09
TLH

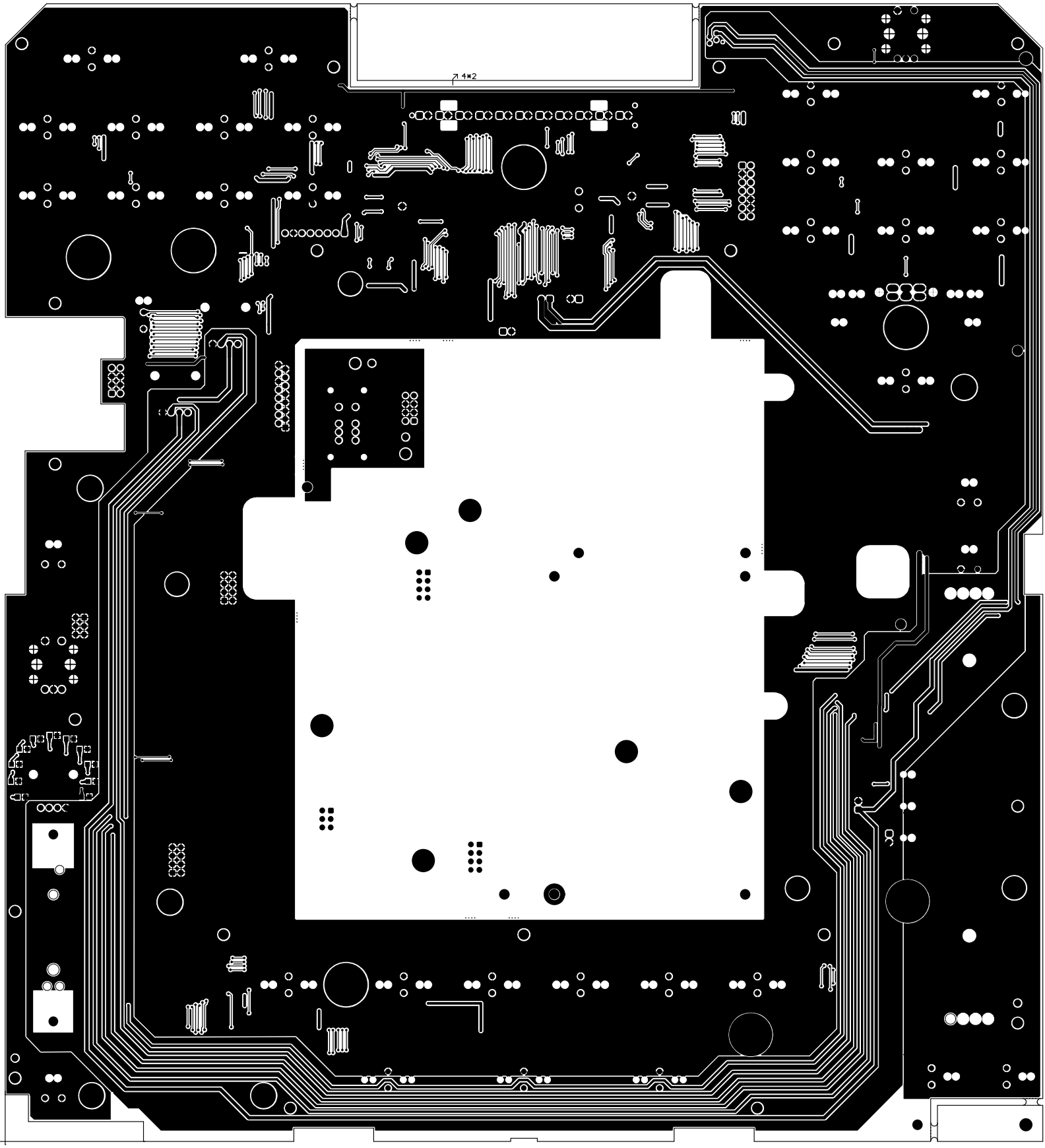
4*2

PC0SC023 ⑨
2×4

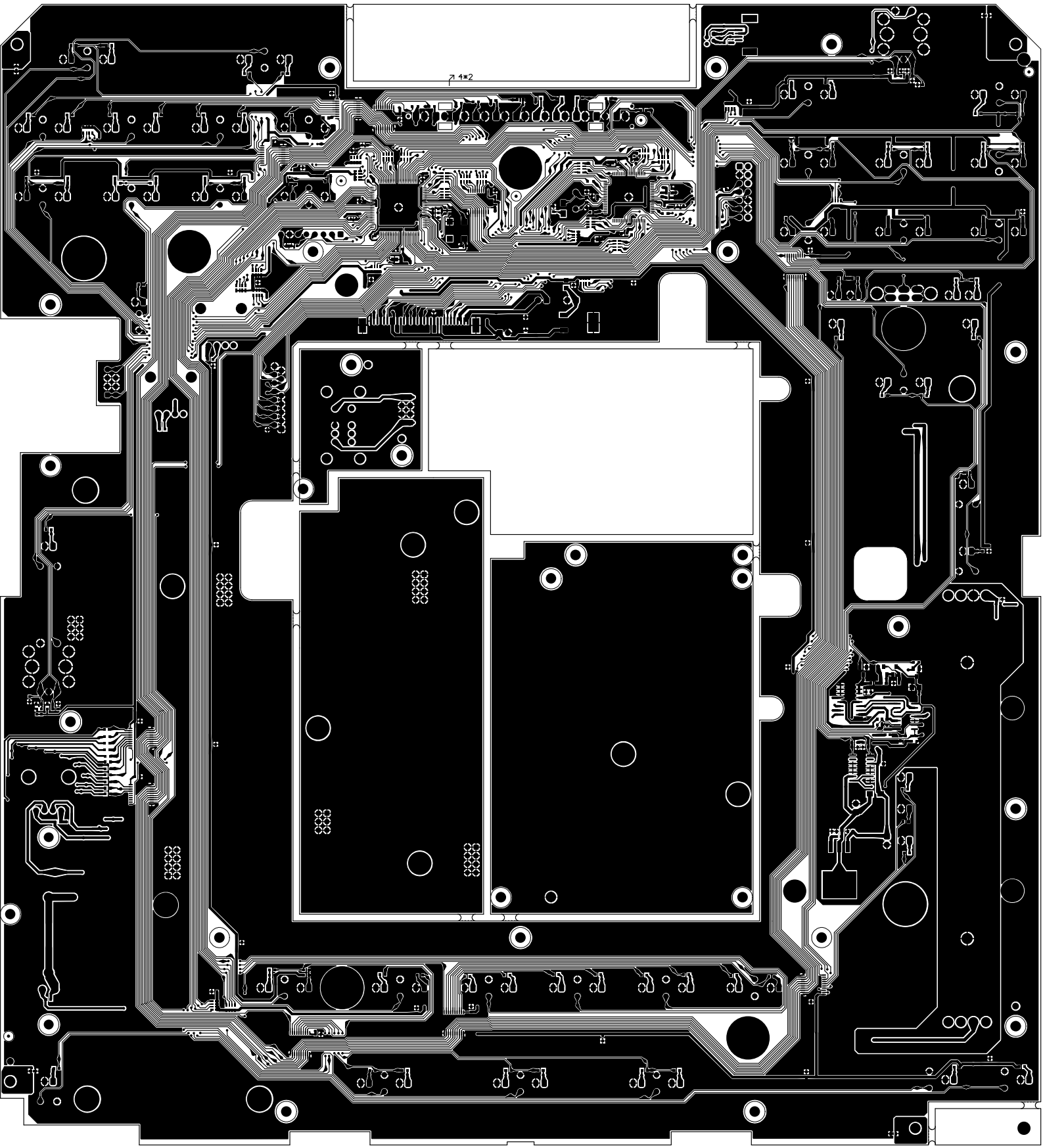
4*2

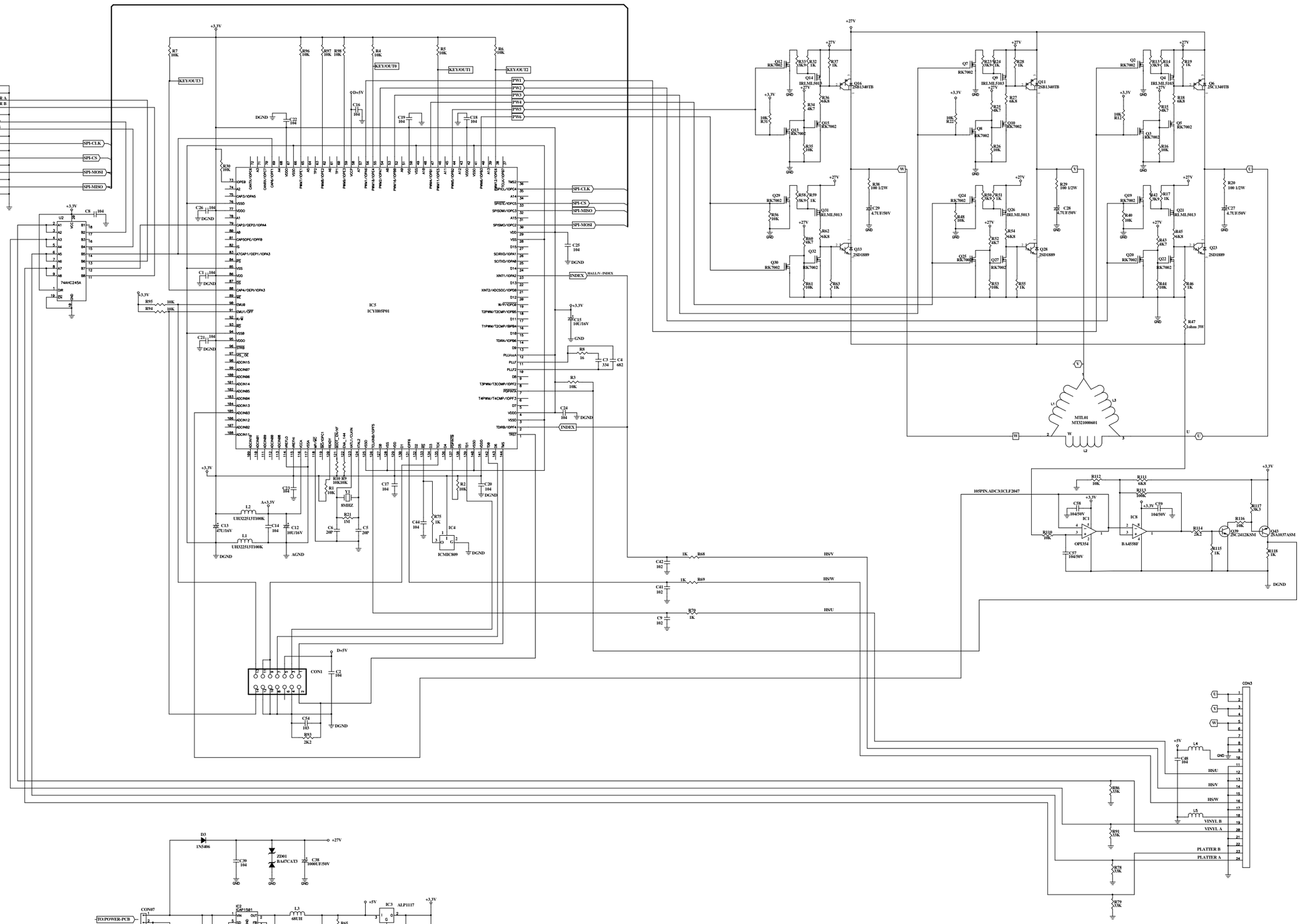

APPROVAL	CHECK	DESIGN	REV	DETE	DESCRITP REVIONS

Title	NUARCK NK14.DD MOTOR	
Size A0	Number MD966YH05 DD MOTOR CIRCUIT DIAGRAM	Rev 1
Date 2009.04.01		Drawn by SCH
Filename MD966YH05 SCH		Sheet of

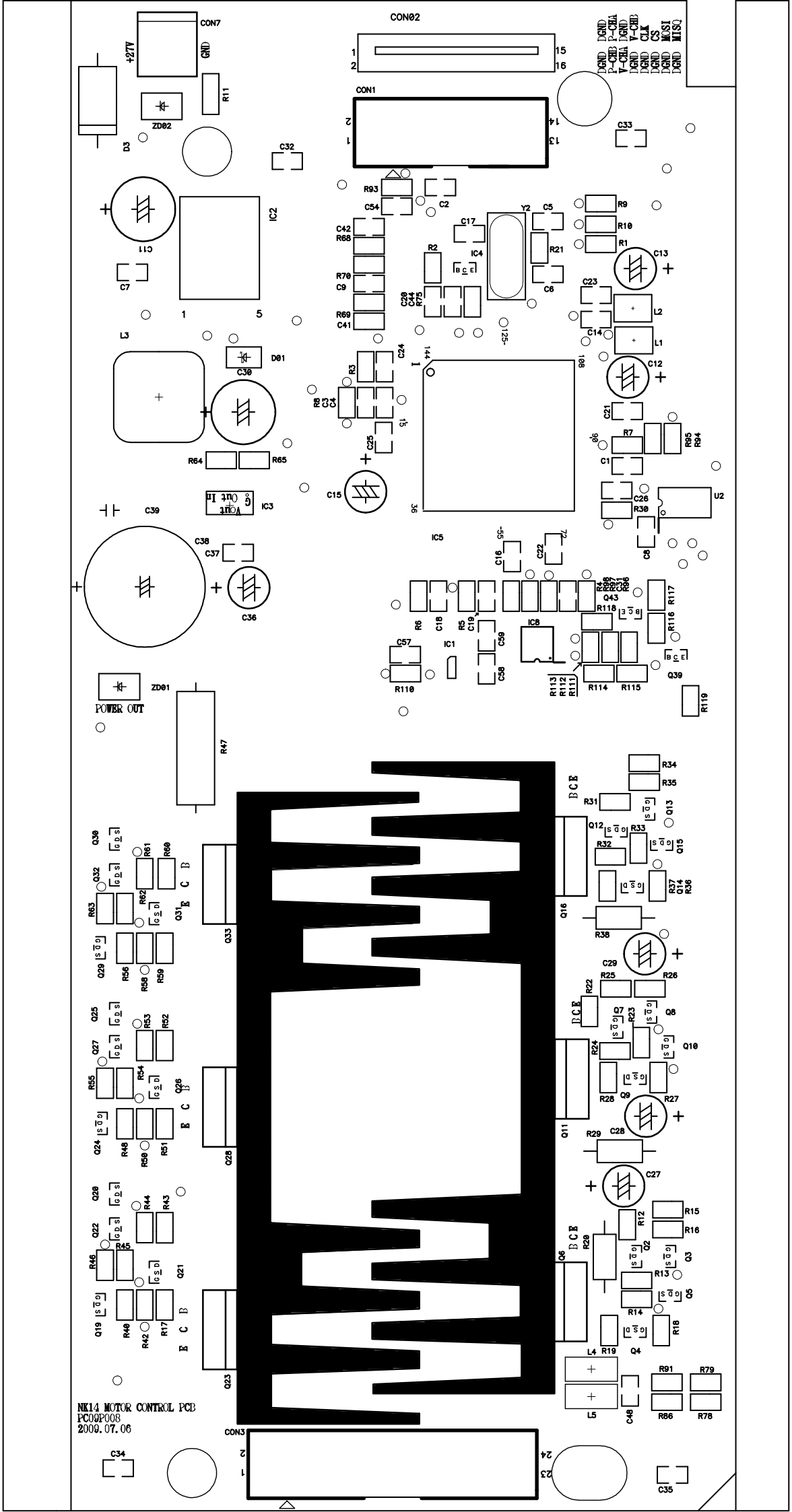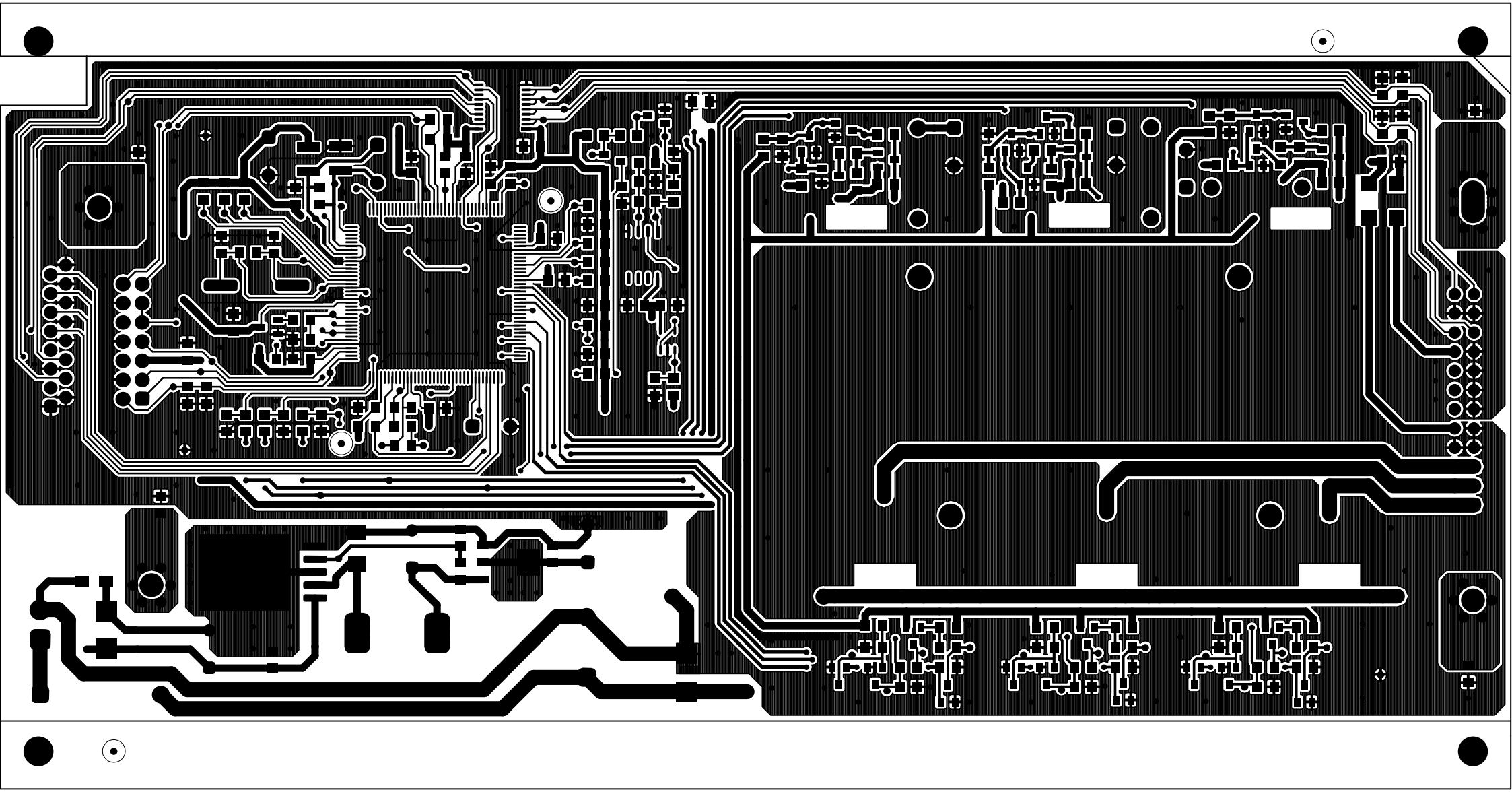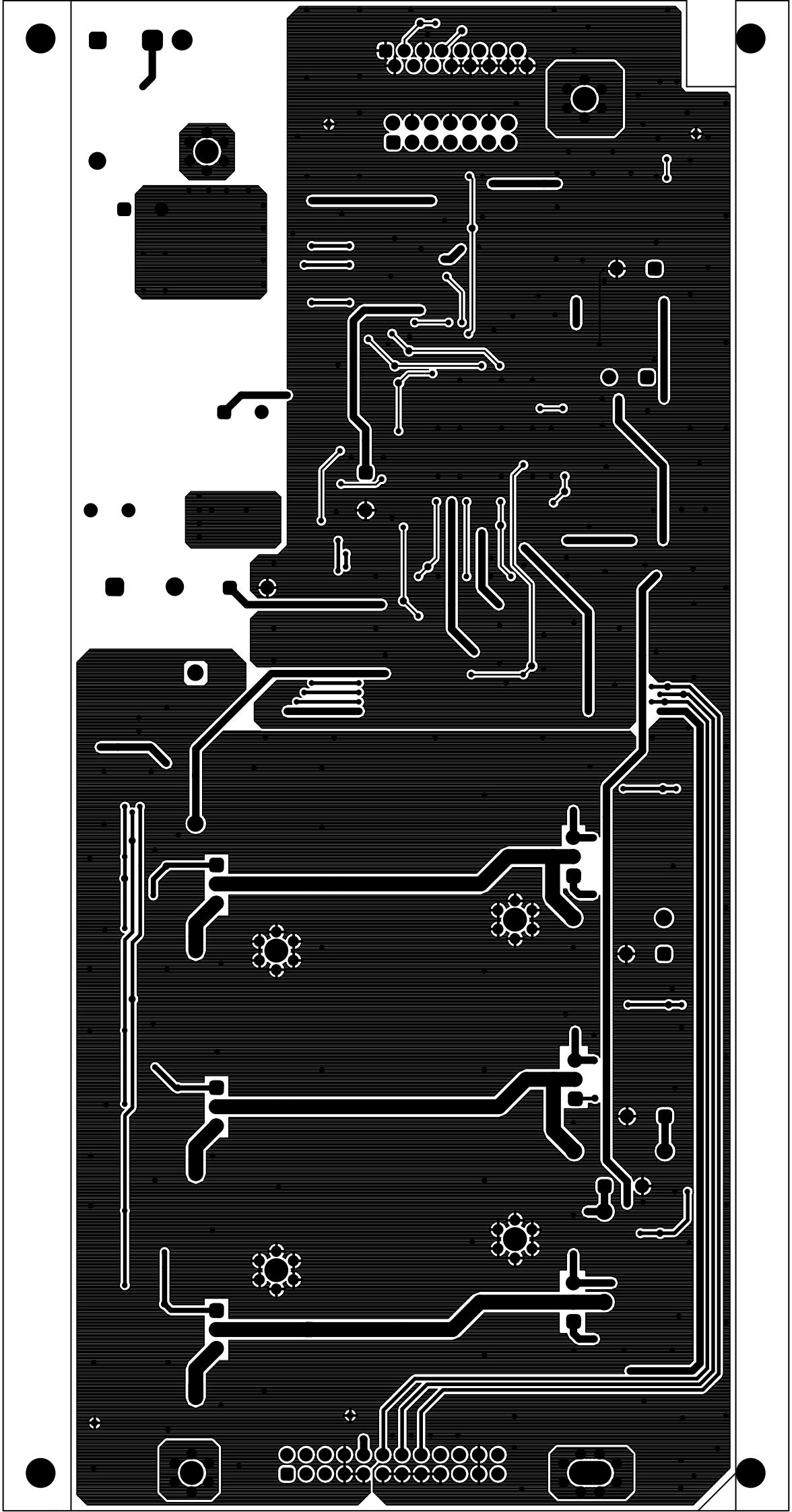
CON7
+27V
GND
CON02
DGND DGND
P-CHB P-CHA
V-CHA DGND
DGND V-CHB
DGND CLK
DGND CS
DGND MOSI
DGND MISO
CON1
CON3
POWER OUT
NK14 MOTOR CONTROL PCB
PC09P008
2009.07.06