2024 4th International Conference on Mobile Networks and Wireless Communications (ICMNWC)

Design and Implementation of 32 – bit MIPS Processor Using Verilog

Dr. Swetha Ravikanti, Asst. Professor
Electronics and Telecommunication
Dayananda Sagar College Of Engineering, Bengaluru, Karnataka, India
swetha.rks@nitw.ac.in

Dr. Preeti Khanwalkar, Asst. Professor
Electronics and Telecommunication
Dayananda Sagar College Of Engineering, Bengaluru, Karnataka, India
Khanwalkar.preeti@gmail.com

Shashank S, Student
Electronics and Telecommunication
Dayananda Sagar College Of Engineering, Bengaluru, Karnataka, India
shashank.rao.1s8@gmail.com

Tejaswini Kumar Mahajan, Student
Electronics and Telecommunication
Dayananda Sagar College Of Engineering, Bengaluru, Karnataka, India
tejumahajan1008@gmail.com

Tanneru Sai Sidhartha, Student
Electronics and Telecommunication
Dayananda Sagar College Of Engineering, Bengaluru, Karnataka, India
tannerusaisiddharth@gmail.com

Vinay B M, Student
Electronics and Telecommunication
Dayananda Sagar College Of Engineering, Bengaluru, Karnataka, India
vinaybm1206@gmail.com

***Abstract*—One architecture that has gained prominence in this area is the MIPS (Microprocessor without Interlocked Pipeline Stages) architecture, a design that excels due to its simplicity, flexibility, and performance enhancements derived from pipelining. It is based on Harvard style with discrete program and data memories. In general, the 32-bit RISC processor uses a fixed 5-stage pipelining to enhance the processing speed, however some instructions don't require all the 5-stages, hence there is still scope to enhance the processing speed. The standard model and the proposed model with flexible pipelining, thermal management unit and clock gating are implemented with help of Xilinx Vivado 2020.2, a hardware description software.**

Keywords— MISC Processor, 5-stage, Verilog HDL, VLSI, Model Sim, Cadence Xilinx Vivado

I. Introduction

32-bit MIPS processor uses a 5-stage pipeline without use of interlocking pipeline stages. MIPS is based on the RISC architecture and a commercial success. There is use of load/store architecture in the MIPS processor. It is subject to the Harvard architecture where the instruction memory and data memory are separate. The pipelining stages are in order IF, ID, EX, MEM and WB. While the pipeline registers hold data concurrently the combinational logic performs arithmetic operations on the data. The output of one stage is then transferred to the next stage and the process goes on till one cycle of instruction is executed. The pipeline stages contain a latch followed by the combinational logic. The presence of pipelining stages significantly improves the CPI and reduces delay between completed instructions. More complex instructions can used in processor and memory locations accessible are increased in comparison to the 16-bit processor. The CPU can operate at higher clock frequency than in processor where pipeline stages are absent.

The next period is the execute stage where the process of the ALU is done upon operands founded on the opcodes. The evaluated result is stored back in the registers.

MIPS uses load/store architecture where memory access is only required when load and store instructions are being fetched . Earlier, we used a non-pipelined MIPS processor. However, nowadays, performance is an essential parameter for any electronic gadget, so to improve the overall performance; we switched to a pipelined MIPS processor from a non-pipelines MIPS processor. Still, when we use a pipeline MIPS processor, we have to deal with hazards.

II. MIPS Architecture Basics

MIPS-based RISC processor, which we have designed, is based on a pipeline structure that uses five different hardware stages like Instruction fetch (IF), Instruction Decode (ID), Execution (EX), Memory Access (MEM), and Write Back (WB) [6]. These stages are separated by a set of registers known as pipeline registers. The purpose of pipelining is to increase overall instruction throughput.

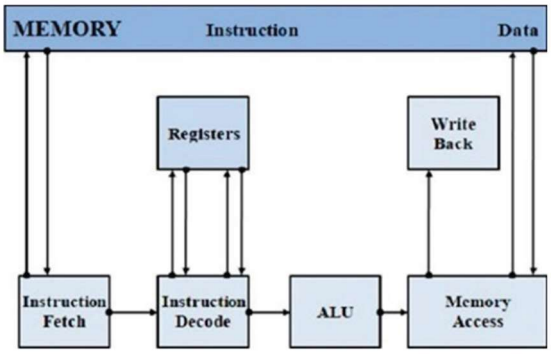

Fig. 1. Block Diagram of Pipeline Technique

979-8-3315-2834-8/24/$31.00 ©2024 IEEE

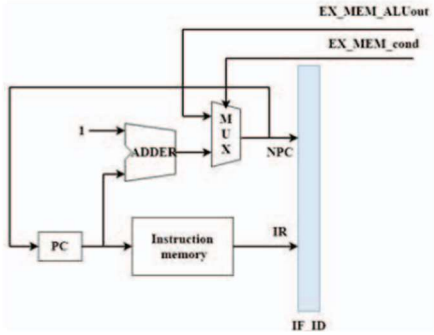

Fig 1.1. Instruction fetch stage.

A. Instruction fetch stage.

In the IF stage the 32-bit Instruction is loaded to the instruction memory by using Program counter (PC). After instruction is fetched the PC will be incremented by one and next stage is pipelined. Program counter [PC] holds the current instruction address, which is used to fetch the training from the instruction memory and is stored in the IF-ID pipeline register.

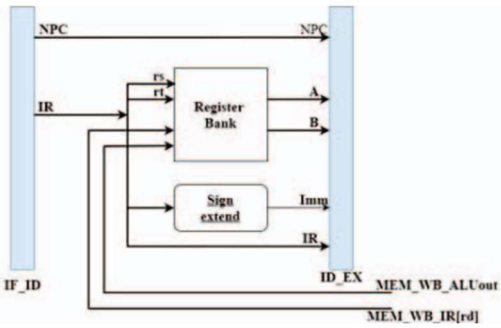

Fig 1.2. Instruction Decode stage.

The next stage include decode stage in which 32-bit instruction is decoded based upon Opcode which is 6-bit. The Opcode is sent to ID stage with appropriate control signals will generated. Following stage include a ALU unit which will perform all the necessary operations as per the decoded information.

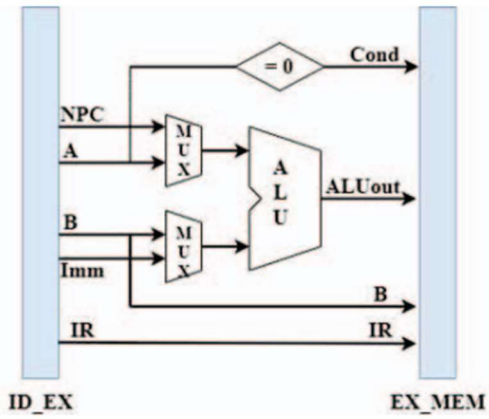

Fig 1.3. Execution stage

It takes data from the Register bank with help of the ID-EX register and performs the ALU operation based on the fetched instruction.

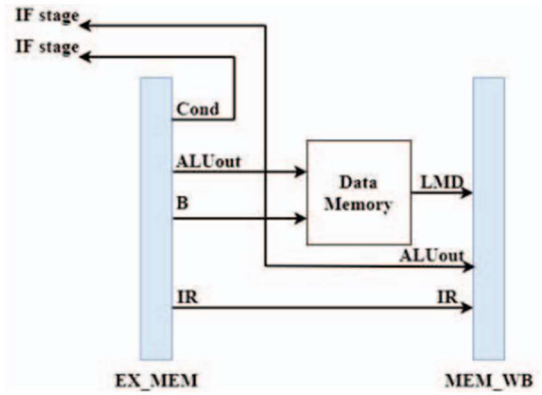

Fig 1.4. Memory access stage

The reminiscence access stage aims to read the data from the register bank or write the data to the register bank based on the load/store instruction fetched. Finally, the output of the data memory is written into the MEM-WB,

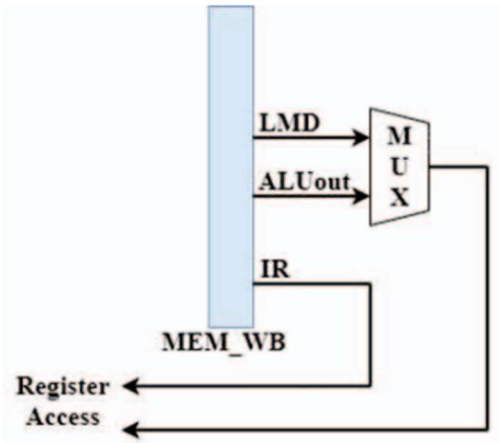

Fig 1.5 . Write back stage.

The Write back stage simply writs the results onto one register of register file or library.

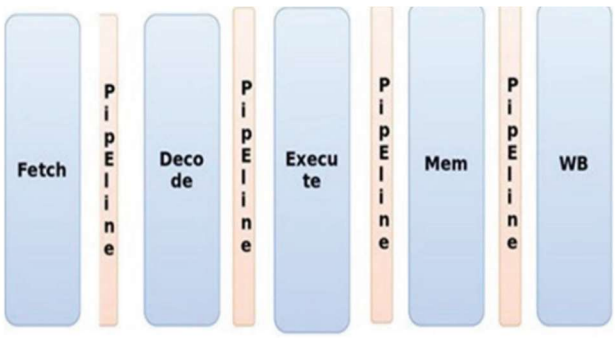

Fig. 2. Block Diagram of MIPS Architecture

III. Research Methodology

1. Processor Design:

The processor will be designed using Verilog HDL, with a focus on creating a five-stage pipeline architecture. The design will include key components such as the instruction fetch, decode, execute, memory access, and write-back stages.

A forwarding unit will be integrated to address data hazards, and multiplexers will be used to route data between stages.

2. Synthesis and Simulation:

The Verilog design will be synthesized using the Quartus prime tool, allows for FPGA operation and testing.

Simulations will be run to validate the processor's functionality, including its ability to handle data hazards and execute instructions correctly. Testbenches will be created to confirm the processor under different scenarios

3. Verification:

The processor will be verified using the Universal Confirmation Methodology (UVM) to safeguard that all functional requirements are met. The UVM testbench will include a corroboration display to compare the processor's output against expected values.

Verification will focus on ensuring that the pipeline operates correctly, hazards are resolved, and the processor functions efficiently under varying conditions

IV. Execution Process

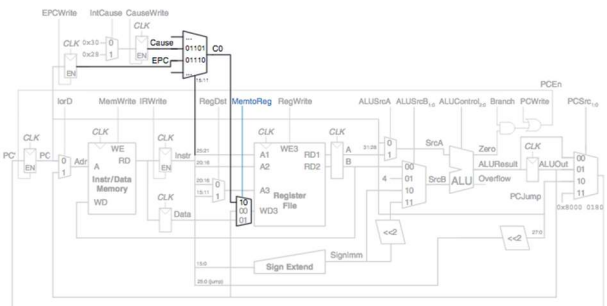

Fig 3. Reference Architecture of MIPS

Xilinx Vivado Design Suite is a software suite used to design, participate, and device hardware description language (HDL) designs for FPGAs and adaptive SoCs

Features

Includes tools for design entry, mixture, place and route, and confirmation and imitation. Vivado also has a built-in logic simulator and high-level synthesis, which adapts C code into programmable logic.

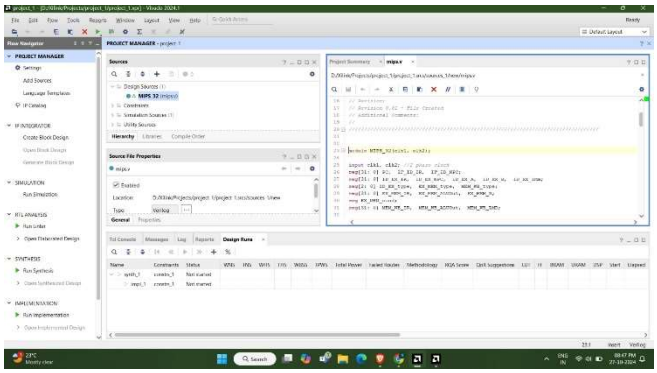

Fig 4. Xilinx Vivado

The outcome of project is a fully functional 32-bit MIPS processor that leverages a five-stage pipeline architecture to improve instruction throughput. The inclusion of a forwarding unit resolves data hazards efficiently, ensuring smooth execution of dependent instructions without pipeline stalls. Additionally, the processor's power efficiency is enhanced through the implementation of clock gating and dynamic thermal management.

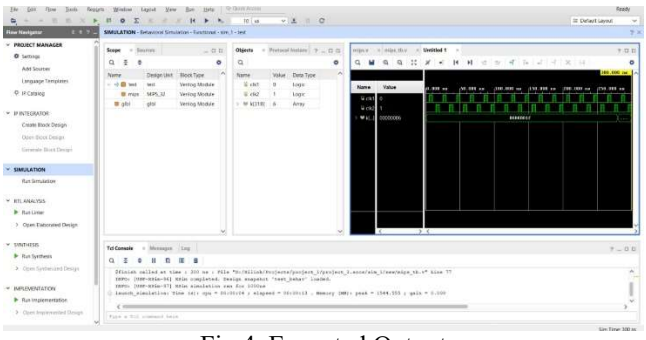

Fig 4. Expected Output

V. Conclusion

The design and application of a 32-bit MIPS processor with a five-stage pipeline architecture validate the noteworthy compensations of using pipelining, furtherance units, and power management techniques in modern processor designs. The five-stage pipeline allows the processor to execute multiple orders instantaneously, improving overall system performance. The forwarding unit resolves data hazards, ensuring that instructions can be executed without introducing unnecessary stalls in the pipeline.

In addition to educating performance, the project addresses the critical issue of power consumption, a major concern in VLSI design. By incorporating clock gating and a thermal management unit, the processor animatedly adjusts its power usage based on workload and temperature conditions, conserving energy during periods of low demand. This makes the processor not only effectual but also reliable, as it operates within safe thermal limits

Overall, the proposed MIPS processor is a influential solution for applications that require high recital and low power ingesting, particularly in embedded systems and DSP.

REFERENCES

[1] Bhat, R., Pandey, D., Ahmad, F., & Gupta, P. (2023, June). Analysis and Optimization of 16-bit RISC Processor and 32-bit MIPS Processor: A Review. In *2023 3rd International Conference on Intelligent Technologies (CONIT)* (pp. 1-6). IEEE.

[2] Patra, S., Kumar, S., Verma, S., & Kumar, A. (2020). Design and Implementation of 32-bit MIPS-based RISC Processor. In *Advances in VLSI, Communication, and Signal Processing: Select Proceedings of VCAS 2018* (pp. 747-757). Springer Singapore.

[3] Dewangan, G. K., Prasad, G., & Mandi, B. C. (2021, August). Design and Implementation of 32 bit MIPS based RISC Processor. In *2021 8th International Conference on Signal Processing and Integrated Networks (SPIN)* (pp. 998-1002). IEEE.

[4] Amruth, M. S. S. D., Swamy, B. P. R., Satyanarayana, C. M. V., Kumar, B. R., Aarthi, V. P. M. B., & Ramesh, M. (2023, June). Five Stage Pipelined MIPS Processor Verification Scoreboard Module using UVM. In *2023 International Conference in Advances in Power, Signal, and Information Technology (APSIT)* (pp. 593-596). IEEE.

[5] Bharath, P. V., & SanthiBhushan, B. (2022, December). MIPS Based 32-Bit RISC Processor with Thermal Management Unit and Flexible Pipelining Structure. In *2022 IEEE 9th Uttar Pradesh Section International Conference on Electrical, Electronics and Computer Engineering (UPCON)* (pp. 1-6). IEEE.

[6] Bhuvaneswary, N., Jaswanth, M., Eswar, M., Rajamouli, R., & Reddy, G. V. D. (2023, April). FIVE STAGE PIPELINED MIPS PROCESSOR VERIFICATION SEQUENCE MODULE USING UVM. In *2023 International Conference on Recent Advances in Electrical, Electronics, Ubiquitous Communication, and Computational Intelligence (RAEEUCCI)* (pp. 1-6). IEEE.

[7] Aslanzadeh, S., Hedayatipour, A., & McFarlane, N. (2020, October). ISFET digital readout circuit with an on-chip MIPS processor. In *2020 IEEE SENSORS* (pp. 1-4). IEEE.

[8] Vani, B. P., Anirudh, R., Singh, A., Jyothi, N., & Monica, N. (2024, June). Implementation of MIPS RISC Processor with Flexible 5-Stage Pipelining and Dynamic Thermal Control. In *2024 IEEE International Conference on Information Technology, Electronics and Intelligent Communication Systems (ICITEICS)* (pp. 1-8). IEEE.

[9] Lim, D. X., & Smitha, K. G. (2019, December). Pipelined MIPS Simulation: A plug-in to MARS simulator for supporting pipeline simulation and branch prediction. In *2019 IEEE International Conference on Engineering, Technology and Education (TALE)* (pp. 1-7). IEEE.

[10] Yousafzai, J. K., & Yousafzai, A. K. (2023, May). A Brick-by-Brick Approach to Learning MIPS Microarchitecture. In *2023 IEEE Global Engineering Education Conference (EDUCON)* (pp. 1-5). IEEE.

[11] Oghostinos, A. E., Moussa, K., Elnaggar, A., AbdAlRhman, A., & Soltan, A. (2022, June). Single-cycle MIPS processor based on configurable approximate adder. In *2022 11th International Conference on Modern Circuits and Systems Technologies (MOCAST)* (pp. 1-4). IEEE.

[12] Birrer, M. B., & Salazar, C. (2022, October). Improving Student Comprehension with Logisim-based RISC Processors. In *2022 IEEE Frontiers in Education Conference (FIE)* (pp. 1-5). IEEE.

[13] Razi, K. F., & Schmid, A. (2023, February). Programmable Seizure Detector Using a 32-bit RISC Processor for Implantable Medical Devices. In *2023 IEEE 14th Latin America Symposium on Circuits and Systems (LASCAS)* (pp. 1-4). IEEE.

[14] Deny, J., Deepika, D. L. S., Lekhana, V., Vandana, G., & Devi, K. G. (2023, June). Five-Stage Pipelined MIPS Processor Verification Driver Module using UVM. In *2023 International Conference on Sustainable Computing and Smart Systems (ICSCSS)* (pp. 1344-1347). IEEE.

[15] Pinyotrakool, K., & Supmonchai, B. (2020, March). Design of a low power processor for embedded system applications. In *2020 8th International Electrical Engineering Congress (iEECON)* (pp. 1-4). IEEE.

[16] Ramesh, M., Kumar, D. C., Yashwanth, L., Reddy, G. J., Naveen, K., & Pandiaraj, K. (2023, June). Five Stage Pipelined MIPS Processor Verification Interface and Test Module using UVM. In *2023 International Conference on Sustainable Computing and Smart Systems (ICSCSS)* (pp. 1226-1232). IEEE.