Arduino Pin Number	Item Number
3	IN2
5	IN1
6	IN3
9	IN4
10	IN5
11	IN6
12	LED's
A0	RC CH1
A1	RC CH2
A2	RC CH3
A3	RC CH4
A6	RC CH5
A7	RC CH6

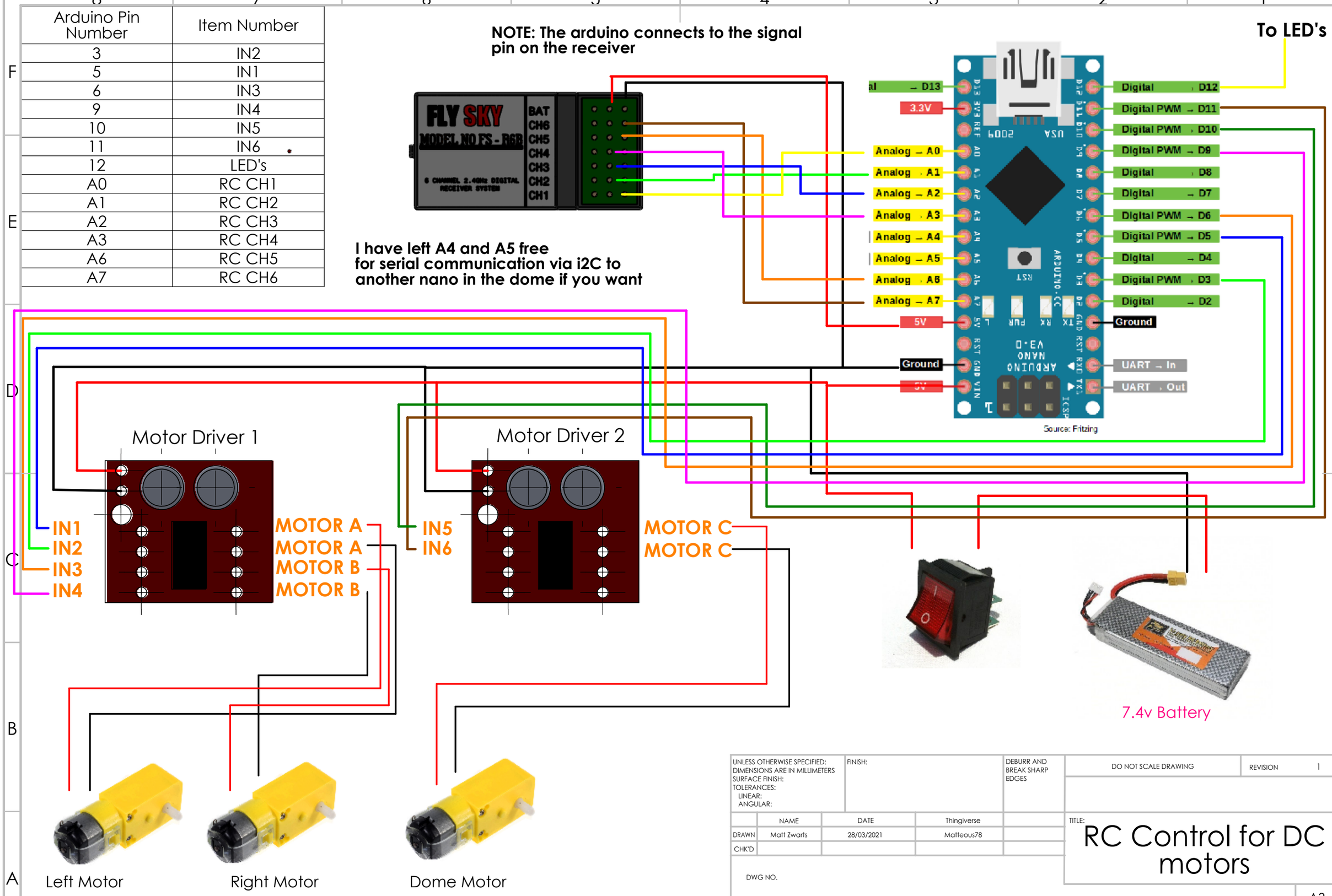

UNLESS OTHERWISE SPECIFIED: DIMENSIONS ARE IN MILLIMETERS SURFACE FINISH: TOLERANCES: LINEAR: ANGULAR:	FINISH:		DEBURR AND BREAK SHARP EDGES	DO NOT SCALE DRAWING — REVISION 1
	NAME	DATE	Thingiverse	
DRAWN	Matt Zwarts	28/03/2021	Matteous78	
CHK'D				

TITLE: RC Control for DC motors

DWG NO. RC Control for Mini droids by Matt Zwarts

A3

SHEET 1 OF 1