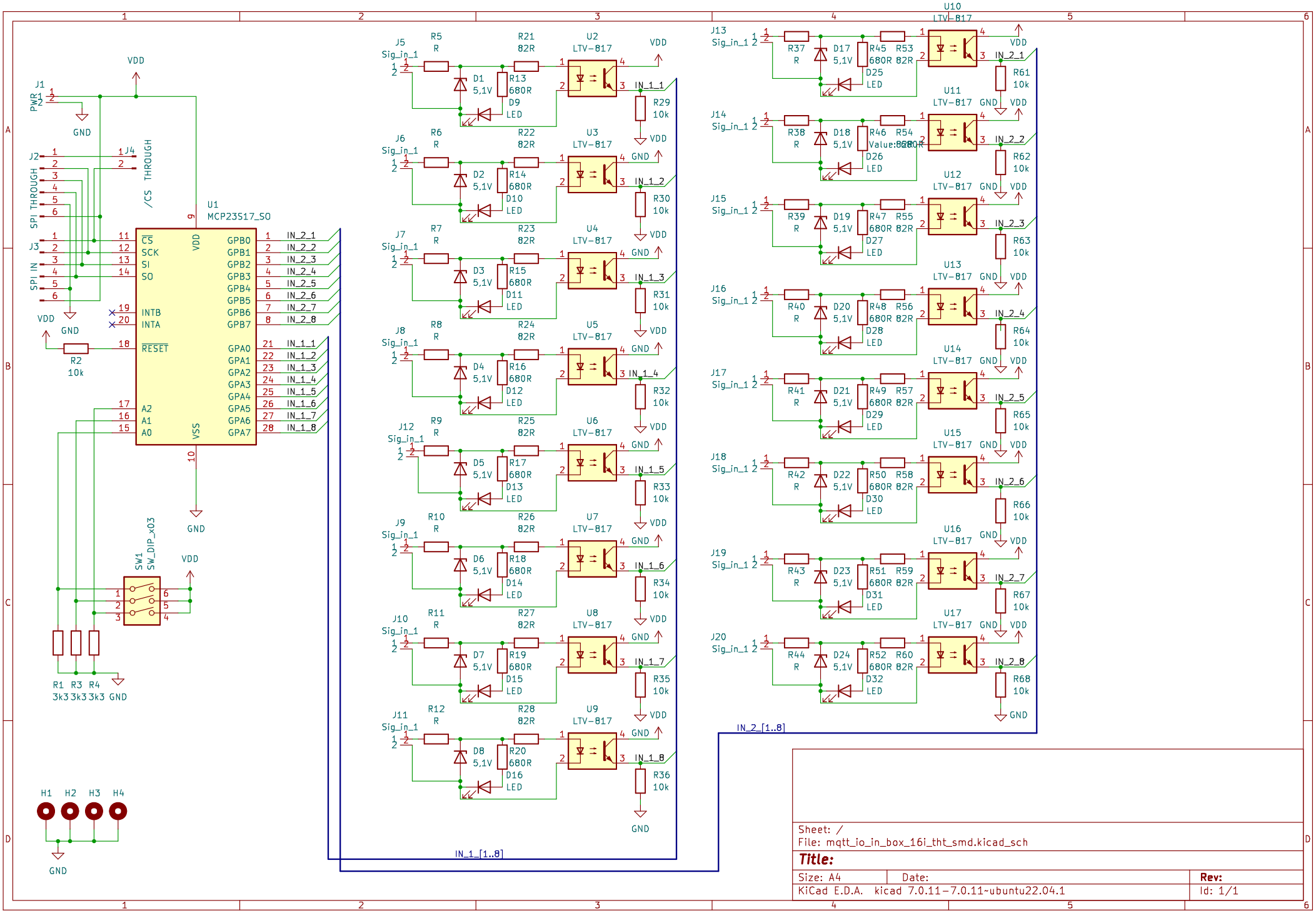
U1
MCP23S17_SO
U2
U3
U4
U5
U6
U7
U8
U9
U10
U11
U12
U13
U14
U15
U16
U17
LTV-817
SW1
SW_DIP_x03
J1
PWR
J2
J3
J4
SPI THROUGH
SPI IN
/CS THROUGH
VDD
GND
R2
10k
R1 R3 R4
3k3 3k3 3k3
H1 H2 H3 H4
IN_1_[1..8]
IN_2_[1..8]
Sheet: /
File: mqtt_io_in_box_16i_tht_smd.kicad_sch
Title:
Size: A4
Date:
Rev:
KiCad E.D.A. kicad 7.0.11-7.0.11~ubuntu22.04.1
Id: 1/1