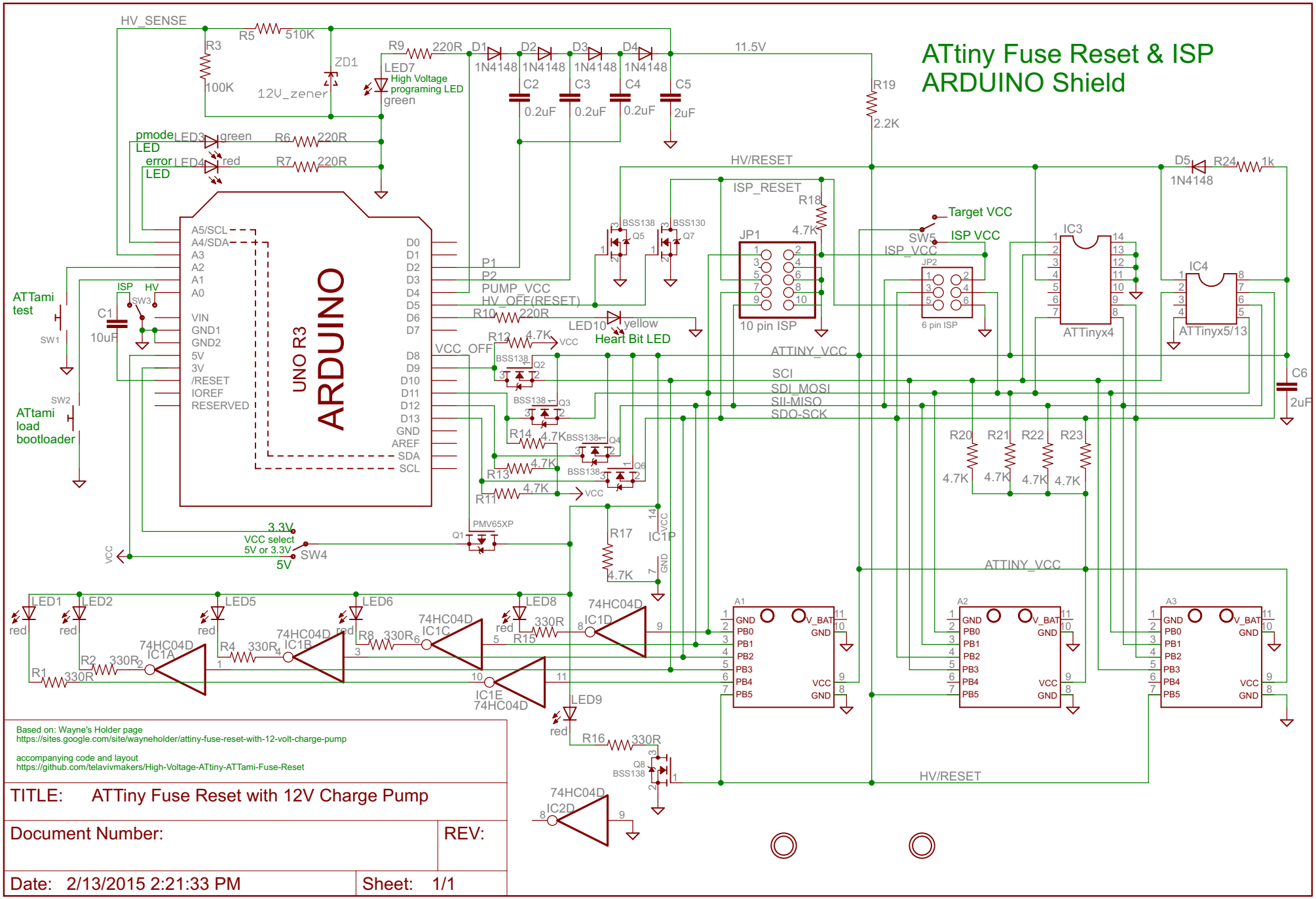

2/13/2015 2:21:55 PM D:\users\Zvika\Documents\eagle\ATTiny Fuse Reset with 12V Charge Pump\ATTiny Fuse Reset with 12V Charge Pump.sch (Sheet: 1/1)