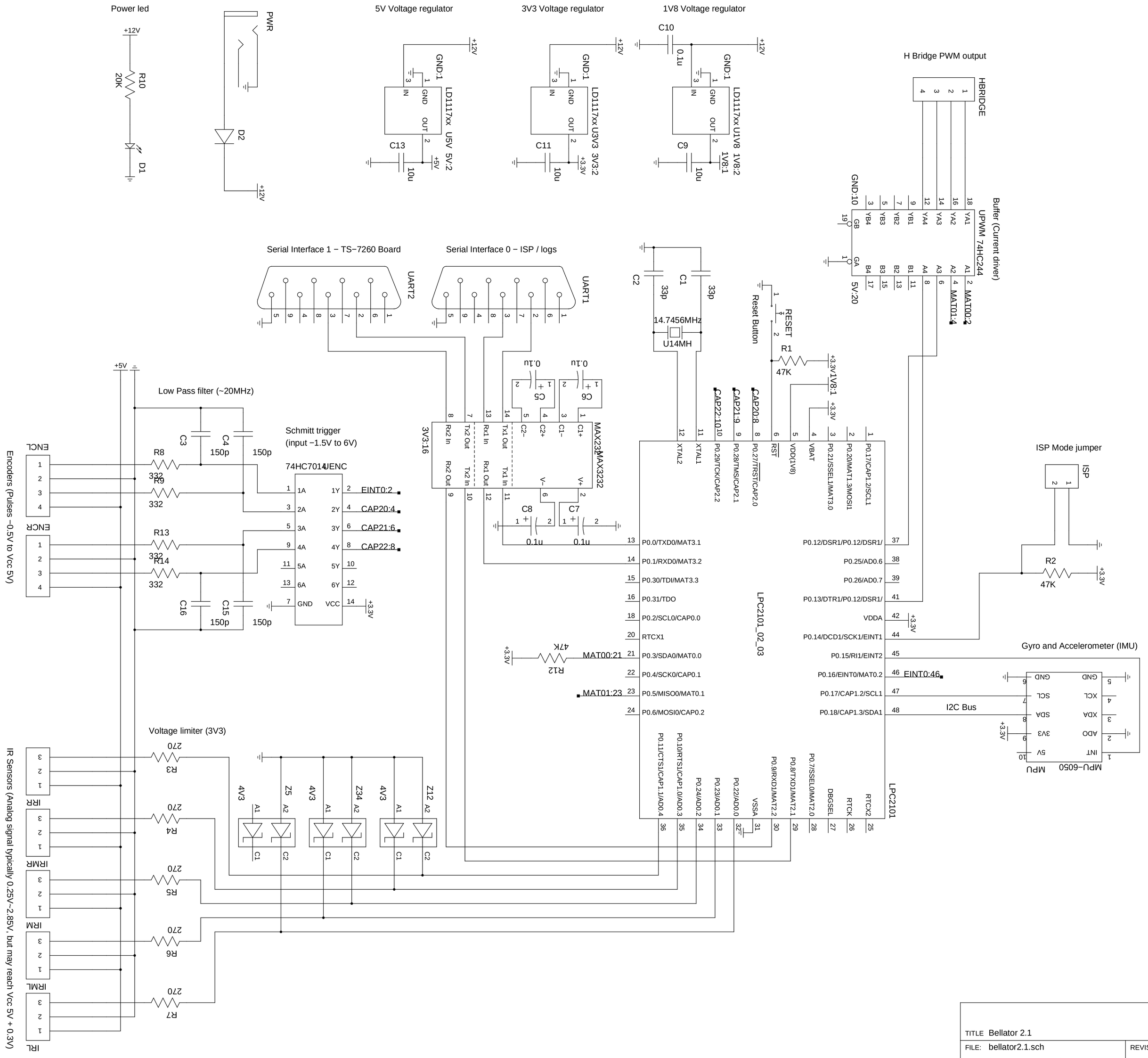

TITLE Bellator 2.1	
FILE: bellator2.1.sch	REVISION: 2.1
PAGE 1 OF 1	DRAWN BY: Telmo Friesen