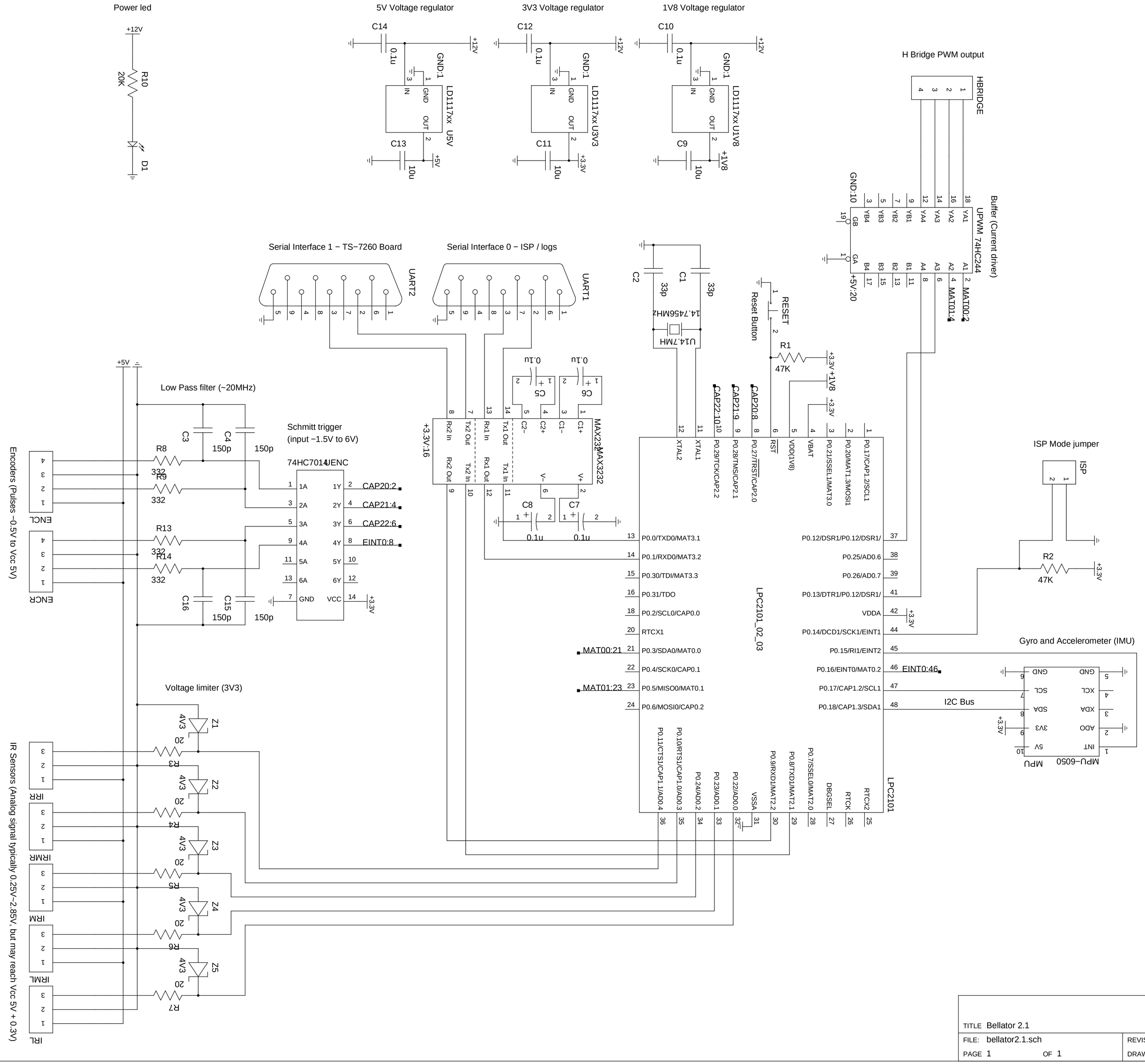
Power led
5V Voltage regulator
3V3 Voltage regulator
1V8 Voltage regulator
H Bridge PWM output
Buffer (Current drive)
Serial Interface 1 − TS−7260 Board
Serial Interface 0 − ISP / logs
Reset Button
ISP Mode jumper
Low Pass filter (~20MHz)
Schmitt trigger
(input −1.5V to 6V)
Encoders (Pulses −0.5V to Vcc 5V)
Voltage limiter (3V3)
IR Sensors (Analog signal typically 0.25V−2.85V, but may reach Vcc 5V + 0.3V)
Gyro and Accelerometer (IMU)
I2C Bus
LPC2101_02_03
LPC2101
MAX3232
74HC7014
LD1117xx U1V8
LD1117xx U3V3
LD1117xx U5V
UART1
UART2
HBRIDGE
UPWM 74HC244
MPU−6050
MPU
ISP
RESET
ENCL
ENCR
IRL
IRR
IRML
IRMR
IRM
TITLE Bellator 2.1
FILE: bellator2.1.sch
REVISION: 2.1
PAGE 1 OF 1
DRAWN BY: Telmo Friesen