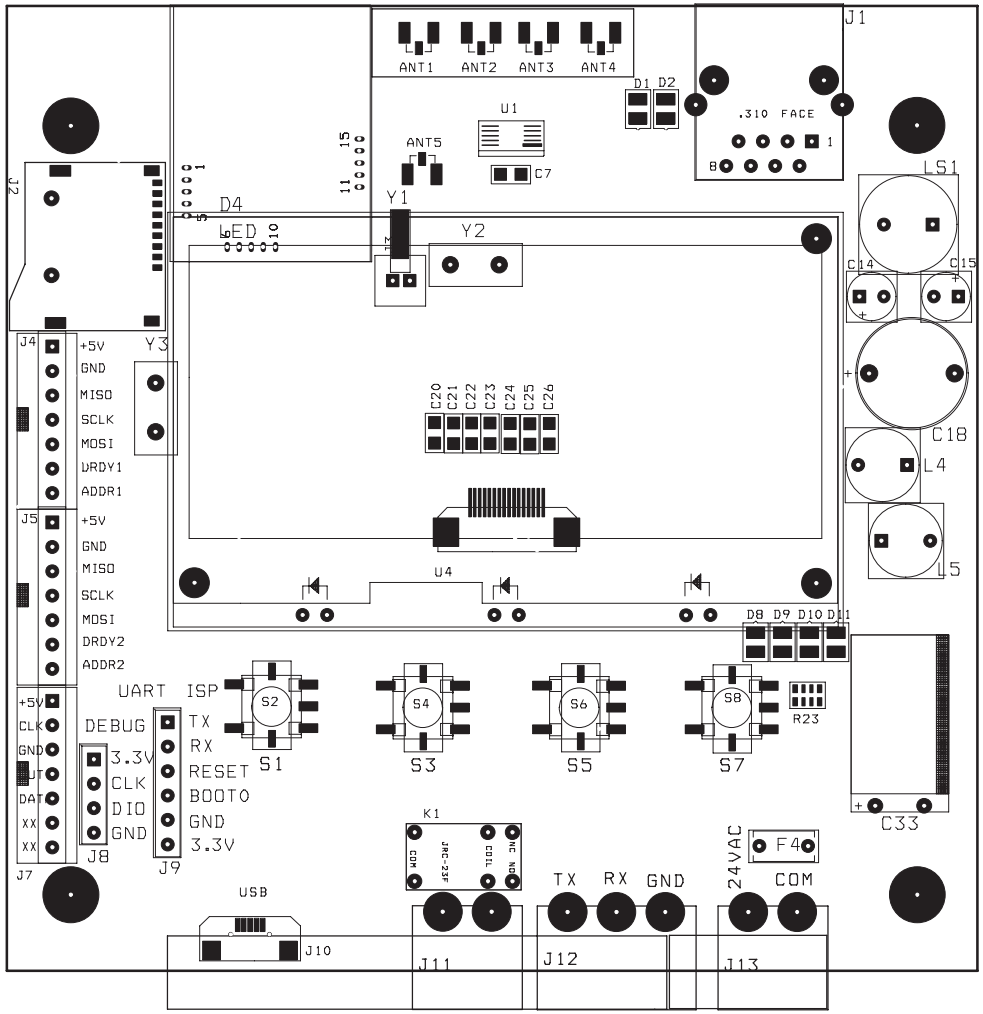
ANT1
ANT2
ANT3
ANT4
ANT5
J1
.310 FACE
U1
Y1
Y2
Y3
D4
LED
LS1
C14
C15
C18
L4
L5
U4
C20
C21
C22
C23
C24
C25
C26
C33
J2
J4
J5
J7
J8
J9
+5V
GND
MISO
SCLK
MOSI
DRDY1
ADDR1
DRDY2
ADDR2
CLK
DAT
XX
UART
ISP
DEBUG
3.3V
TX
RX
RESET
BOOT0
S1
S2
S3
S4
S5
S6
S7
S8
R23
K1
USB
J10
J11
J12
J13
24VAC
F4
COM
TX
RX
GND

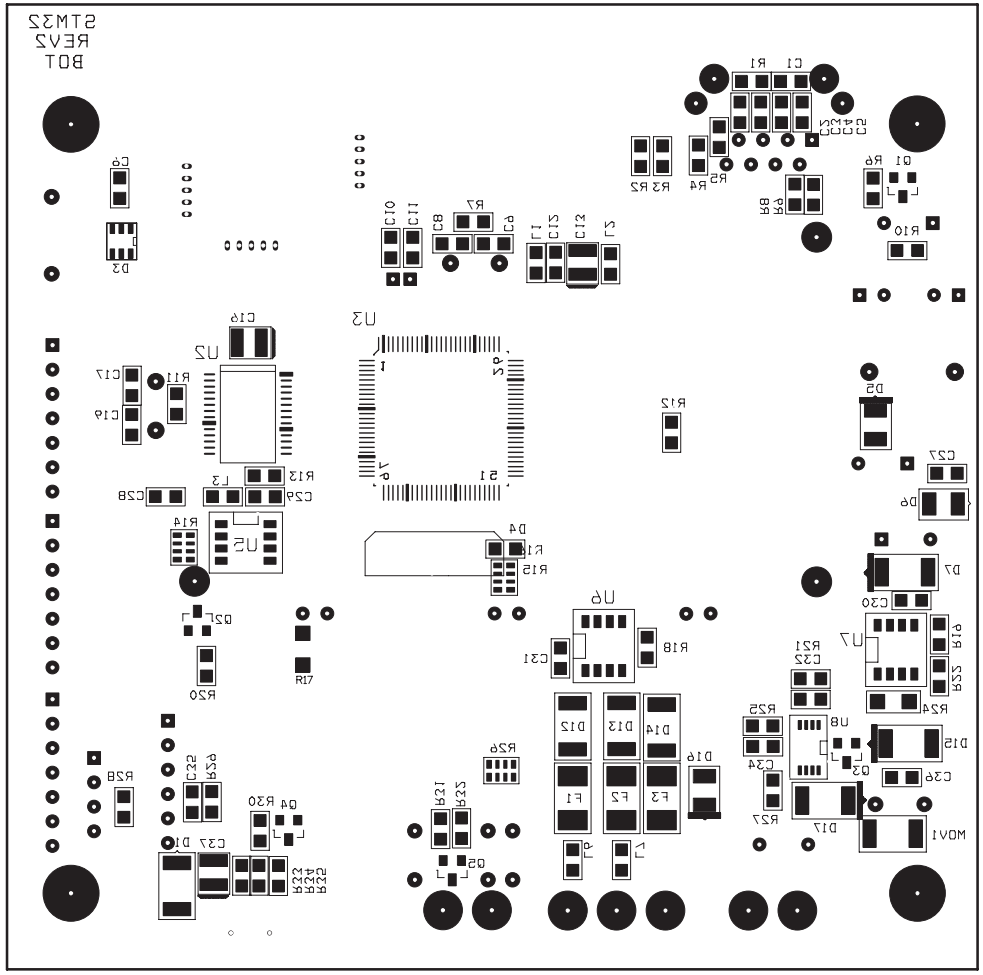
STM32
REV2
BOT
U3
U2
U5
U6
U7
U8

Z:\Designs\T3_Modules\Hardware\STM32F103VET_T3\STM32_MainBoard_REV0

Bill Of Materials December 29,2014 9:40:47

It n	Qty	Reference	Value	PCB Footprint	Description	Tle	Part_Number
1	8	ANT1,ANT2,ANT3,ANT4,ANT5,ANT6,ANT7,ANT8	ATN_SMA	ZIGBEE-SMA-S	FOR zigebee,gsm,wifi and so on		ATN_SMA
2	1	C1	0.01UF_50V	SM/C_0805		10%	0.01UF_50V_0805
3	10	C2,C3,C5,C6,C12,C27,C28,C29,C31,C36	0.1UF_50V	SM/C_0805		10%	0.1UF_50V_0805
4	2	C4,C35	1UF_50V	SM/C_0805		10%	1UF_50V_0805
5	1	C7	0.1UF_50V	SM/C_0805			0.1UF_50V_0805
6	4	C8,C9,C17,C19	18PF_50V	SM/C_0805		10%	18PF_50V_0805
7	2	C10,C11	10PF_50V	SM/C_0805		10%	12PF_50V_0805
8	1	C13	4.7UF_10V	SM/C_TANT			4.7UF_10V_TANT
9	1	C14	330UF_16V	CPCYL1/D.200/LS.100/.031			20% 330UF_16V_DIP
10	1	C15	100UF_25V	CPCYL1/D.200/LS.100/.031			20% 100UF_25V_DIP
11	1	C16	10UF_16V	SM/C_TANT		10%	10UF_16V_TANT
12	1	C18	0.1F_5.5V	CESUPERCAP.1F			0.1F_5.5V_DIP
13	7	C20,C21,C22,C23,C24,C25,C26	1UF_50V	SM/C_0805			
14	1	C30	220PF_50V	SM/C_0805		10%	220PF_50V_0805
15	1	C32	1NF_50V	SM/C_0805		10%	1NF_50V_0805
16	1	C33	470UF_50V	CPCYLHORIZ/D.400/LS.200/.034			20% 470UF_50V_DIP
17	1	C34	100PF_50V	SM/C_0805		10%	100PF_50V_0805
18	1	C37	10UF_16V	SM/C_TANT			10UF_16V_TANT
19	6	D1,D2,D8,D9,D10,D11	LED_RED	SM/D_0805_21			LED_RED_0805
20	1	D3	BZA408B	SM/SOT457	Non-clamping range: -5 V to +5 V		BZA408B_SOT457
21	1	D4	ZCLB7304	FLEX_16P_0.5MM_BACKLIGHT_NEW_2			
22	1	D5	1N4148	SM/D_1206_21_2	Fast Switching Diodes		1N4148_1206
23	1	D6	1N4744	SM/D_1206_21_REV1	VZ=15V		1N4744_15V_1206
24	2	D7,D17	1N5819	SM/D_MLL41_21	V(RMS)=28V		1N5819
25	3	D12,D13,D14	SMBJ10CA	SM/MOV40V	V(RWM)=10V		SMBJ10CA
26	1	D15	1N4007	SM/D_MLL41_21	VRRM=1000V		1N4007
27	1	D16	1N4729/1N4734	SM/D_1206_21_2	1N4729 VZ=3.6V,1N4734 VZ=5.6V		1N4729/1N4734
28	1	D18	1N5819	SM/D_MLL41_12	V(RMS)=28V		1N5819
29	3	F1,F2,F3	0.1A_60V	SM/FUSE_1812	MF-MSMF Series - PTC Resettable Fuses		MF-MSMF010
30	1	F4	0.65A_60V	RAD/.250X.125/LS.200/.034	LP60 series		LP60-065

FOR CO2_MAINBOARD

31	1	J1	LU1S041XLF	TELE/TM.310FACE/8X8/2	no_led ,Fit ASIX11015,NC		SLU1XLF
32	1	J2	Micro_SD	MICROSD	MOLEX SD Slot		micoSD
33	1	J3	RFID_module	SIP/UHF MODULE_15P_REV1	USE FOR RFID_LABATTS		D_module RFI
34	2	J4,J5	Header7_2.54	SIP/TM/L.700/7	Pitch=2.54mm, single,male,180°		Header7_2.54
35	1	J6	Mounting_hole	BOARDOUTLINE_VC1000_BOT_2_2_2	MOUNTING HOLE Tiny multipanel		CONN77
36	1	J7	CON6	SIP/TM/L.700/7			
37	1	J8	Header4_2.54	SIP/TM/L.400/4_REV1	Pitch=2.54mm.singal,male,180°		CONN36
38	1	J9	Header6_2.54_7.7mm	SIP/TM/L.600/6	Pitch=2.54mm,single,male,180°,H=7.7mm,P=2mm,T1000		Header6_2.54_7.7mm
39	1	J10	CN-USB	MICROUSB_REV2			
40	1	J11	Header20X2+2HOLES	ETB2INCH	single,male,two-in-one,Blue,Pan Ventura		Euro2_5.08 two_in_one blue
41	1	J12	ETB3_5.08	ETB3INCH	Pitch=5.08mm, single,male,180°,Black		Header3_5.08
42	1	J13	ETB2_5.08	ETB2INCH	Pitch=5.08mm,single,male , 90°,Green,Plugg able		CONN25
43	1	K1	JRC-23FHS	RELAYJRC_23F	Tstat5C		JRC-23FHS
44	1	LS1	BUZZER_Small	BEEPER_SMALL	CO2 Main Board BUZZER		LS
45	3	L1,L6,L7	0.3A_1K	SM/C_0805	0.3A_1K_100MHZ		0.3A_1K
46	2	L2,L3	47uH	SM/C_0805			47uH
47	1	L4	22uH_1A	L/330UH	0709,1A,22UH		22uH_1A
48	1	L5	330uH_1A	L/330UH	0709,1A,330UH		330uH_1A
49	1	MOV1	SMBJ36CA	SM/MOV40V	V(RWM)=36V		SMBJ36CA
50	2	Q1,Q5	2N2222	SM/SOT23_123			2N2222
51	1	Q2	2N2907	SM/SOT23_123_2N2907			
52	1	Q3	SI2303BDS	SM/SOT23_123			SI2303BDS
53	1	Q4	2N2907	SM/SOT23_123_2N2907			2N2907
54	3	R1,R7,R11	1M_0805	SM/R_0805		1%	1M_0805
55	2	R2,R3	1K_0805	SM/R_0805		1%	1K_0805
56	4	R4,R5,R8,R9	49.9R_0805	SM/R_0805		1%	49.9R_0805
57	2	R6,R31	100R_0805	SM/R_0805		1%	100R_0805
58	2	R10,R32	200R_0805	SM/R_0805		1%	200R_0805
59	3	R12,R28,R29	100K_0805	SM/R_0805		1%	100K_0805
60	1	R13	2.32K_0805	SM/R_0805		1%	2.32K_0805
61	1	R14	R_10K_1%_4P	SM/R_1608_NET4			
62	1	R15	330R 4PACK	SM/R_1608_NET4			
63	1	R16	330R	SM/R_0805			
64	1	R17	30R	SM/R_1206			
65	1	R18	10K_0805	SM/R_0805			1% 10K_0805
66	1	R19	1.96K_0805	SM/R_0805			1% 1.96K_0805

67	1	R20	1K	SM/R_0805			
68	1	R21	47K_0805	SM/R_0805			1% 47K_0805
69	1	R22	16.9K_0805	SM/R_0805			1% 16.9K_0805
70	1	R23	1K_4P	SM/R_1608_NET4			1% 10K_4P
71	1	R24	0.5R_1206	SM/R_1206_REV1			1% 0.5R_1206
72	1	R25	33K_0805	SM/R_0805			1% 33K_0805
73	1	R26	10K_4P	SM/R_1608_NET4			1% 10K_4P
74	1	R27	20K/11K_0805	SM/R_0805			1% 20K/11K
75	1	R30	10K_0805	SM/C_0805			10K_0805
76	2	R33,R34	22R_0805	SM/C_0805			22R_0805
77	1	R35	1.5K_0805	SM/C_0805			1.5K_0805
78	4	S1,S3,S5,S7	NOPOP	KEY_TD07XB			
79	4	S2,S4,S6,S8	S_7D_22XU_Z	SW-PIN2			
80	1	U1	ADG804	SOP50P490X110-10N			
81	1	U2	ENC28J60	SOG.025/28/WG.420/L.400	10M Ethernet chip		ENC28J60
82	1	U3	STM32F103VE	QUAD.50M/100/WG1600/CR	100 PINs , small STM32 chip		STM32F103VE
83	1	U4	TEMJY07C33	FLEX_16P_0.5MM_REVERSE			
84	1	U5	U_CAT24C016_S	SOP150			
85	1	U6	SN65HVD3082	8SOP150			SN65HVD3082
86	1	U7	MC34063A_SO	8SOP150			MC34063A_SO
87	1	U8	LM3485	8USOP			LM3485
88	1	U9	PE4257	SOP20-PE4257			
89	1	Y1	32.768KHZ	32K_CRYSTAL			32.768KHZ
90	1	Y2	8Mhz	XTAL1	DIP		8Mhz
91	1	Y3	25Mhz	XTAL1	DIP		25Mhz

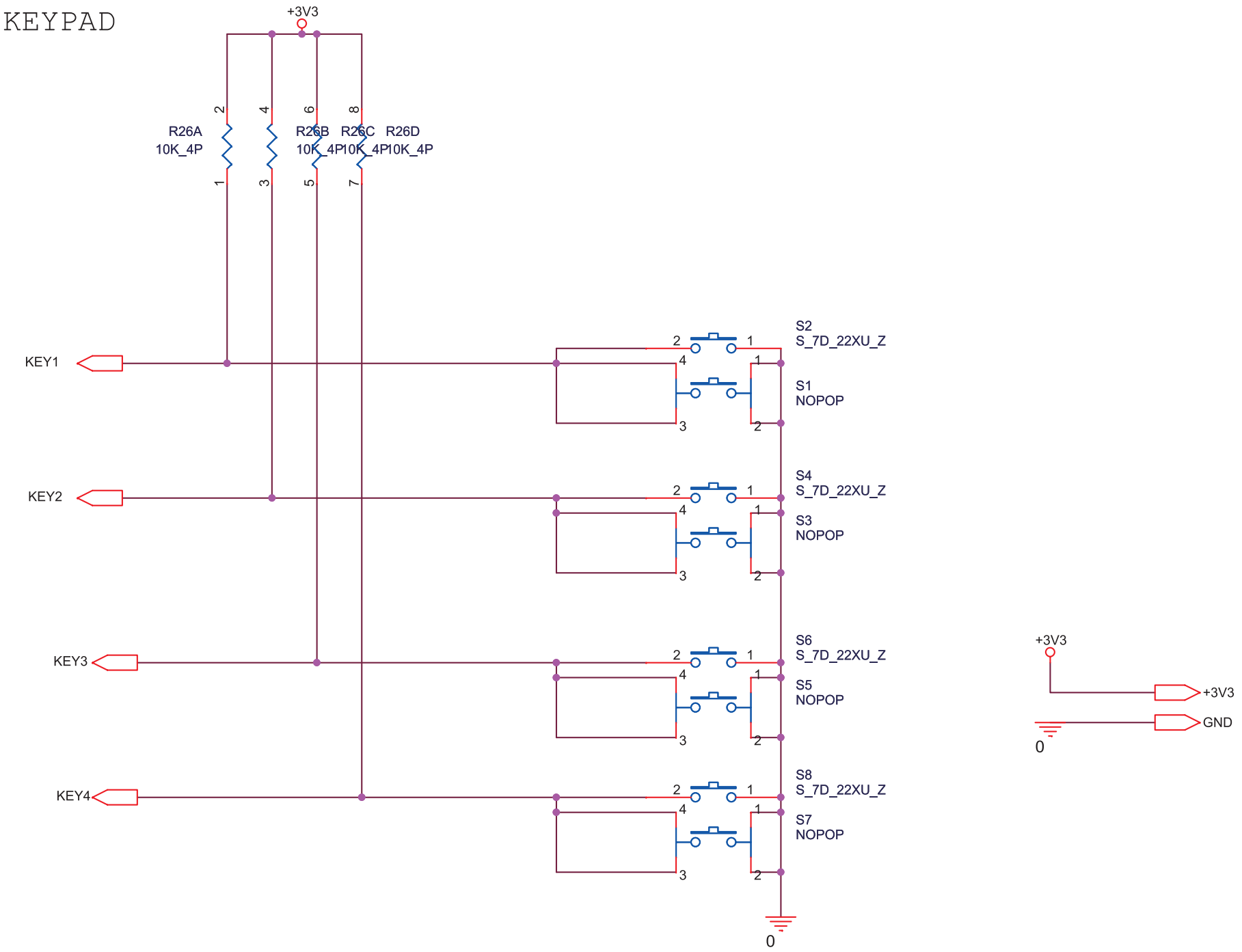
KEYPAD
+3V3
R26A
10K_4P
R26B
10K_4P
R26C
10K_4P
R26D
10K_4P
KEY1
KEY2
KEY3
KEY4
S2
S_7D_22XU_Z
S1
NOPOP
S4
S_7D_22XU_Z
S3
NOPOP
S6
S_7D_22XU_Z
S5
NOPOP
S8
S_7D_22XU_Z
S7
NOPOP
0
+3V3
+3V3
GND
0

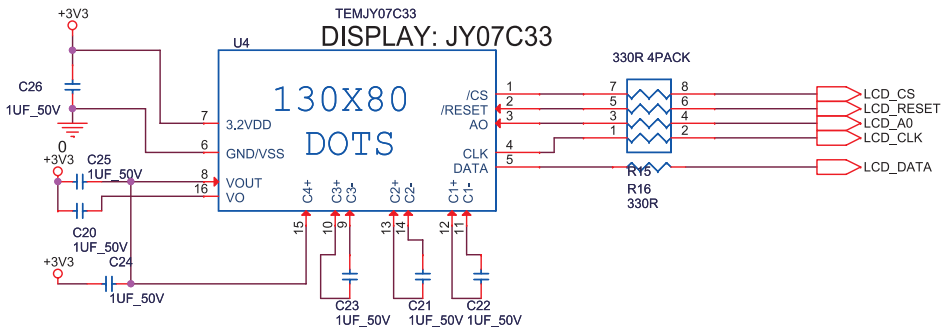

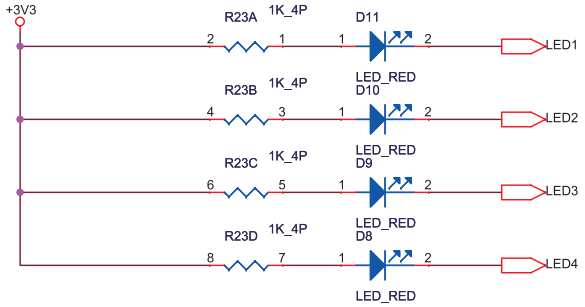

BACKLIGHT

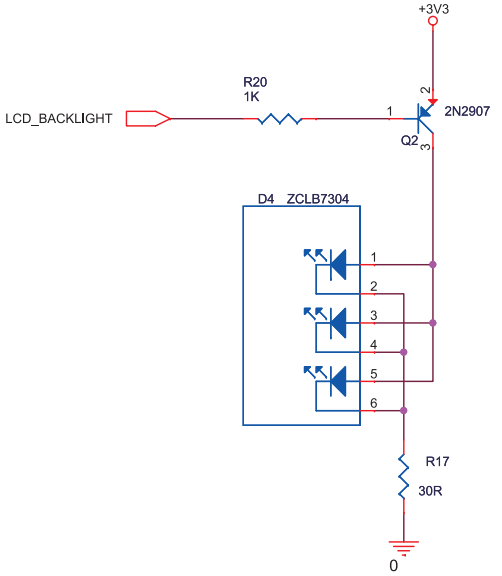

Title	<Title>	
Size B	Document Number <Doc>	Rev <RevCode>
Date: Wednesday, March 04, 2015	Sheet 1 of 1	

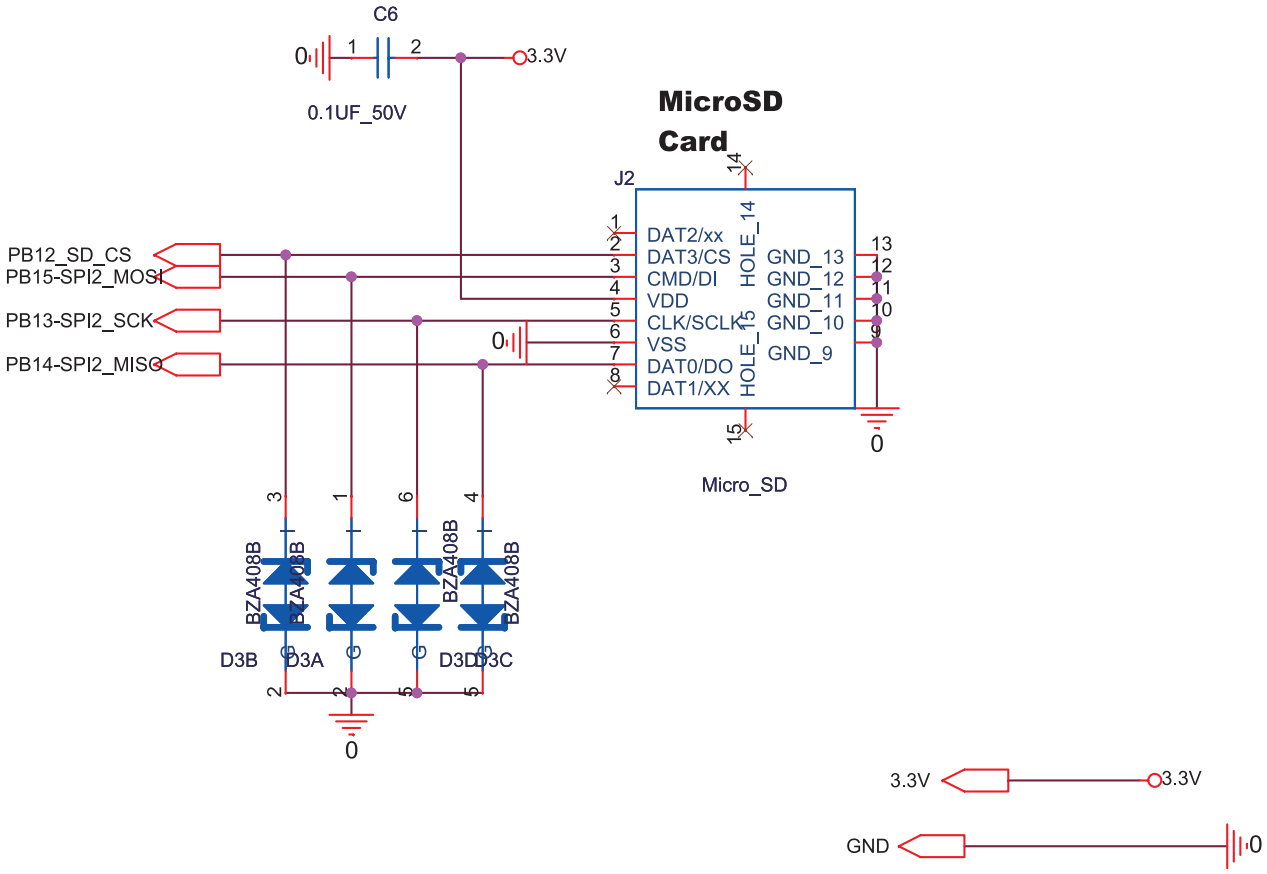

Title	<Title>	
Size A	Document Number <Doc>	Rev <RevCode>
Date: Wednesday, March 04, 2015	Sheet 1 of 1	

E2 MEMORY CHIP

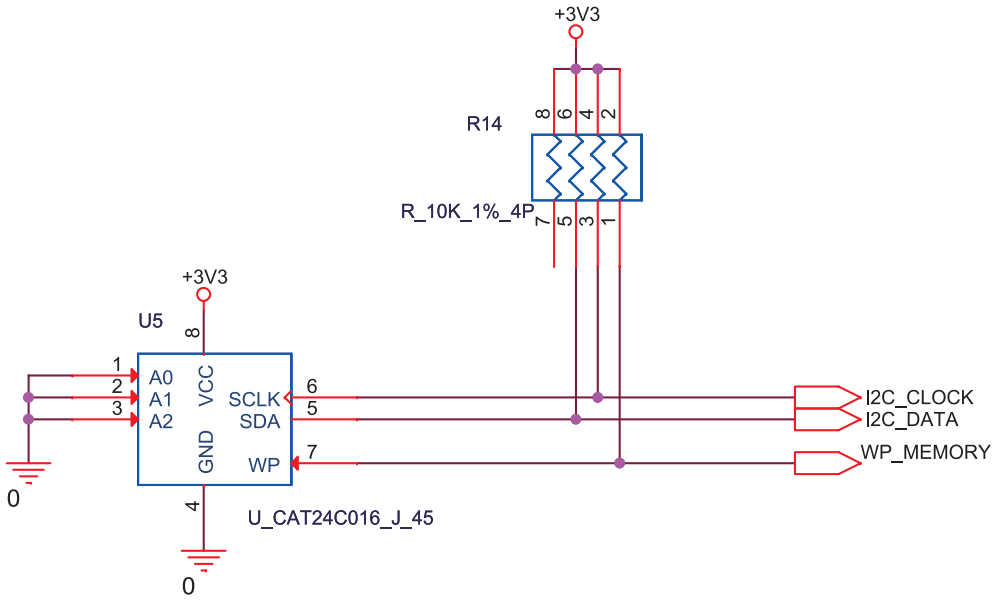

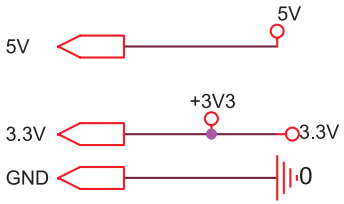

OPTO

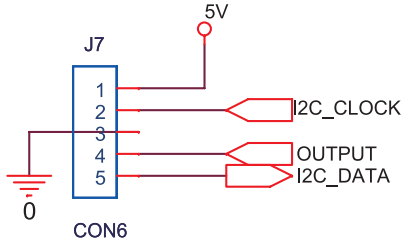

Title <Title>		
Size A	Document Number <Doc>	Rev <RevCode>
Date: Wednesday, March 04, 2015	Sheet 1 of 1	

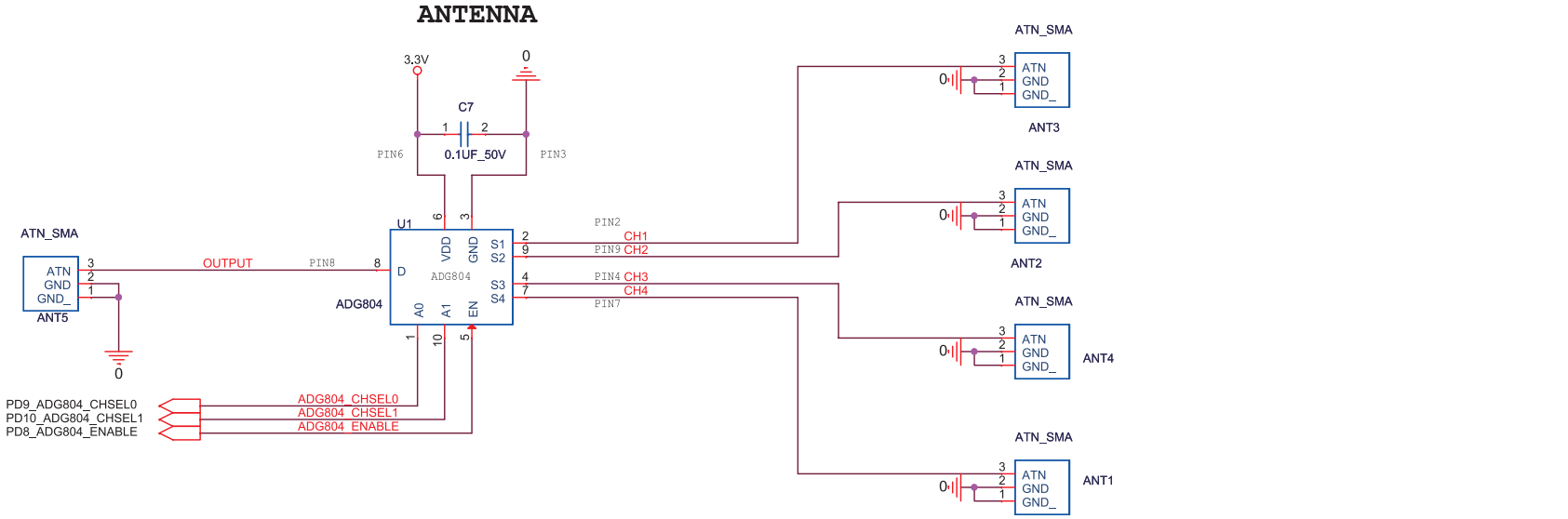

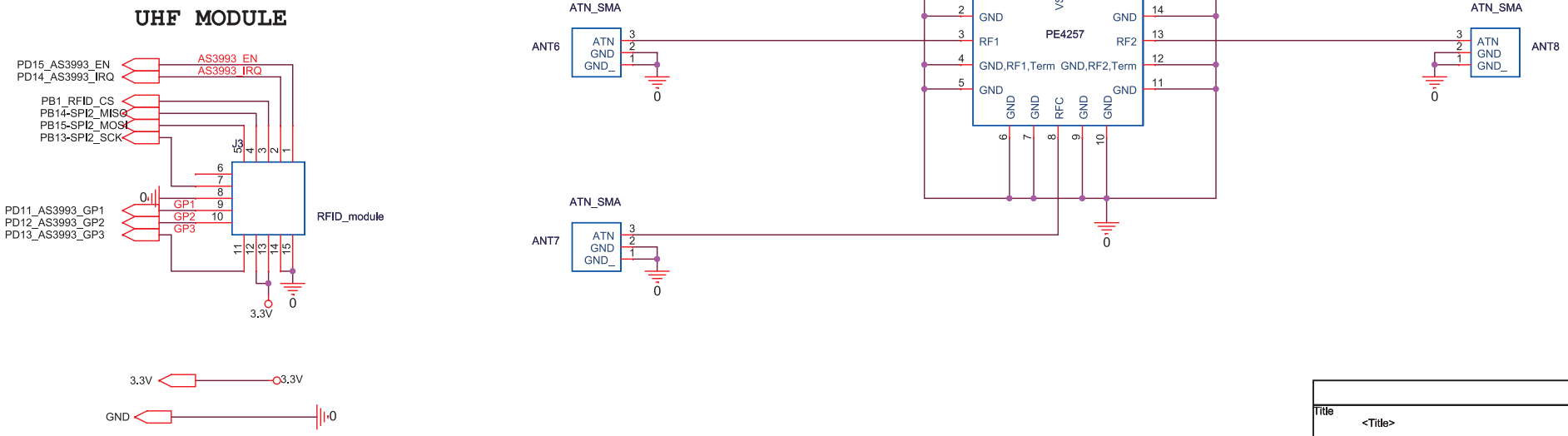

Title	<Title>		
Size B	Document Number <Doc>		Rev <RevCode>
Date: Thursday, March 05, 2015	Sheet 1 of 1		

Title	<Title>
Size A	Document Number <Doc>
Rev	<RevCode>
Date:	Wednesday, January 28, 2015
Sheet	1 of 1

Ethernet

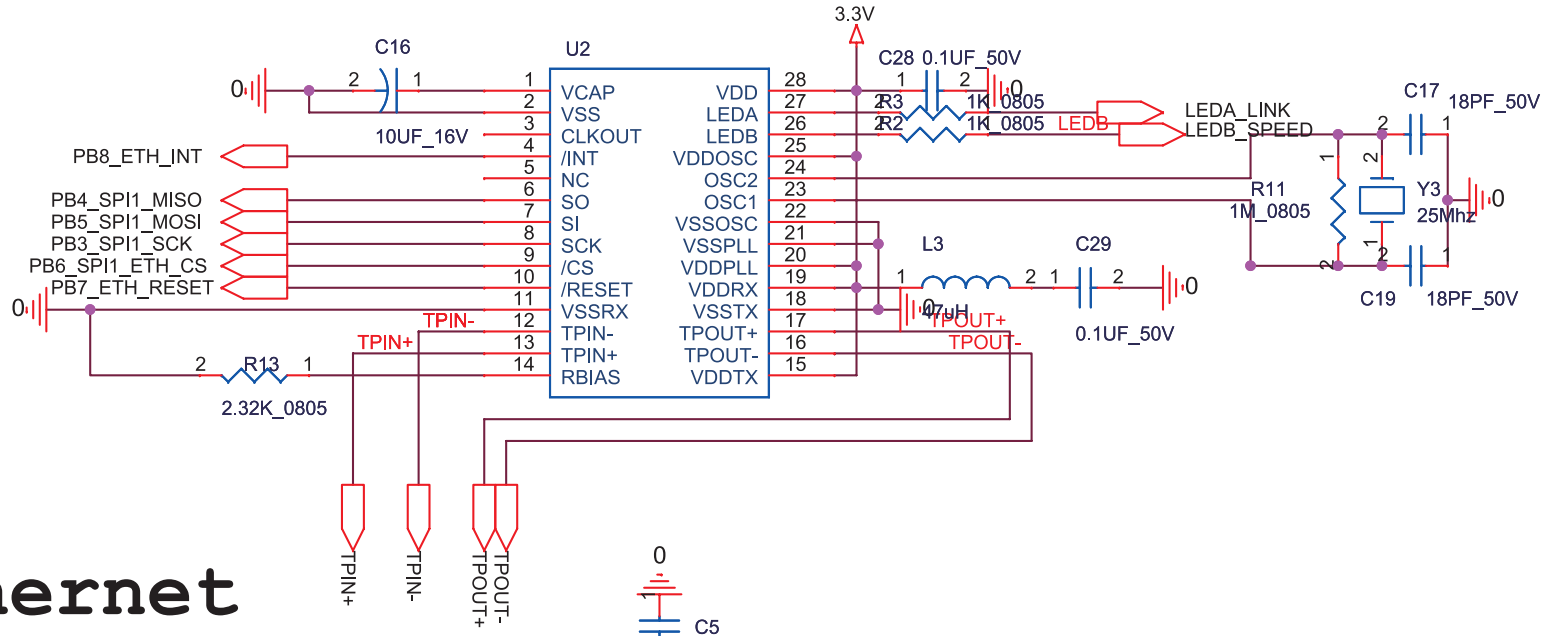

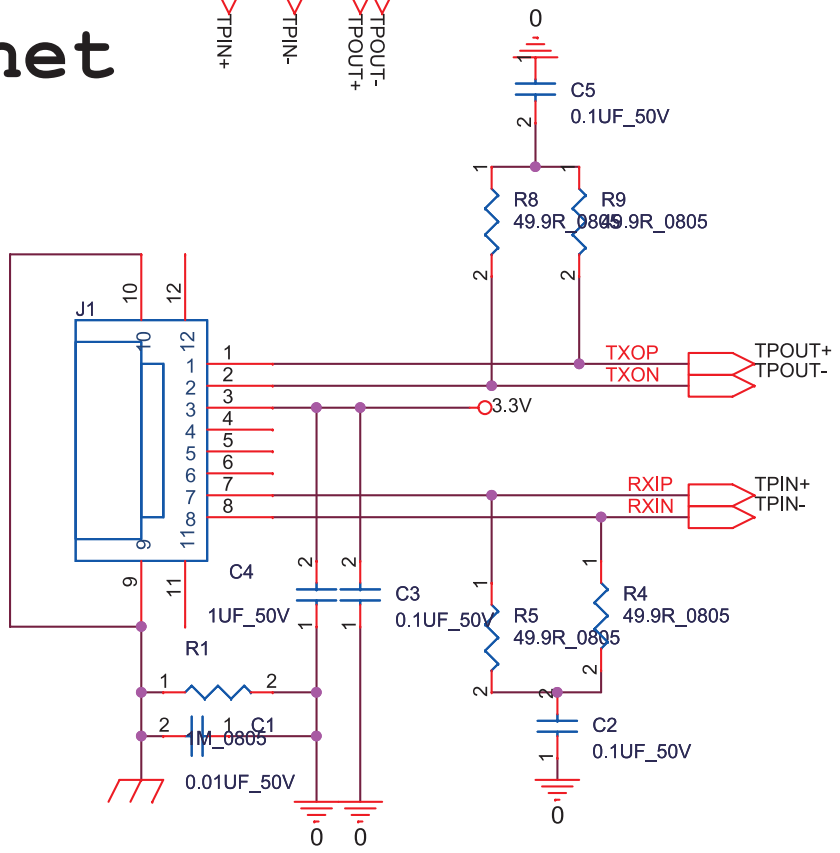

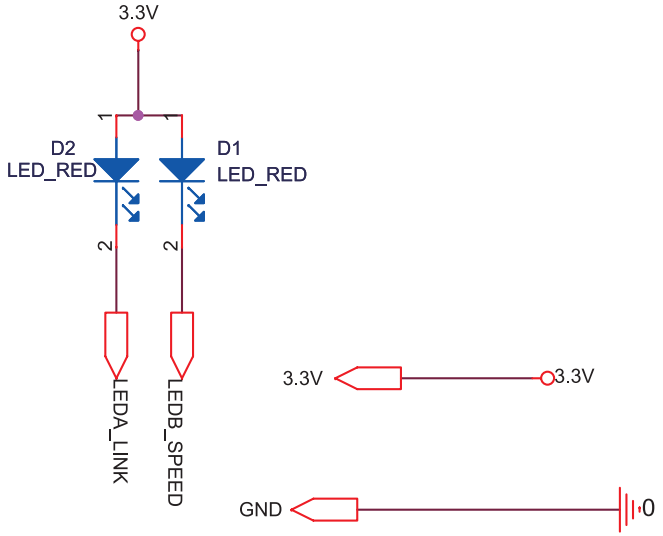

Title: <Title>		
Size: A	Document Number: <Doc>	Rev: <RevCode>
Date: Wednesday, March 04, 2015	Sheet 2 of 7	

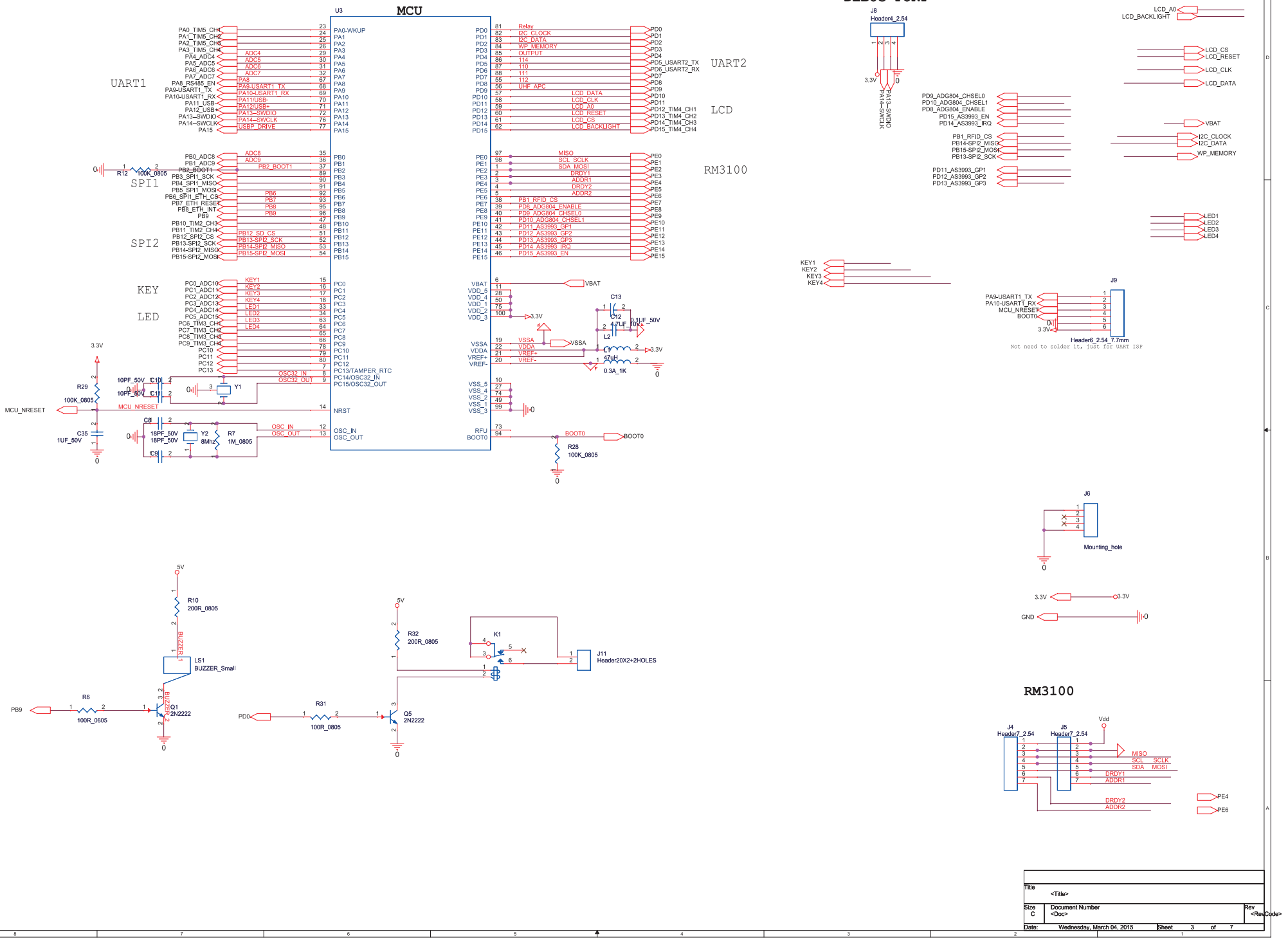
MCU
U3
UART1
SPI1
SPI2
KEY
LED
UART2
LCD
RM3100
DEBUG PORT
J8
Header4_2.54
J9
Header6_2.54_7.7mm
Not need to solder it, just for UART ISP
J6
Mounting_hole
J4
Header7_2.54
J5
Header7_2.54
RM3100
MCU_NRESET
Y1
Y2
8Mhz
LS1
BUZZER_Small
Q1
2N2222
Q5
2N2222
K1
J11
Header20X2+2HOLES
Title
<Title>
Size
C
Document Number
<Doc>
Rev
<RevCode>
Date:
Wednesday, March 04, 2015
Sheet
3
of
7

POWER

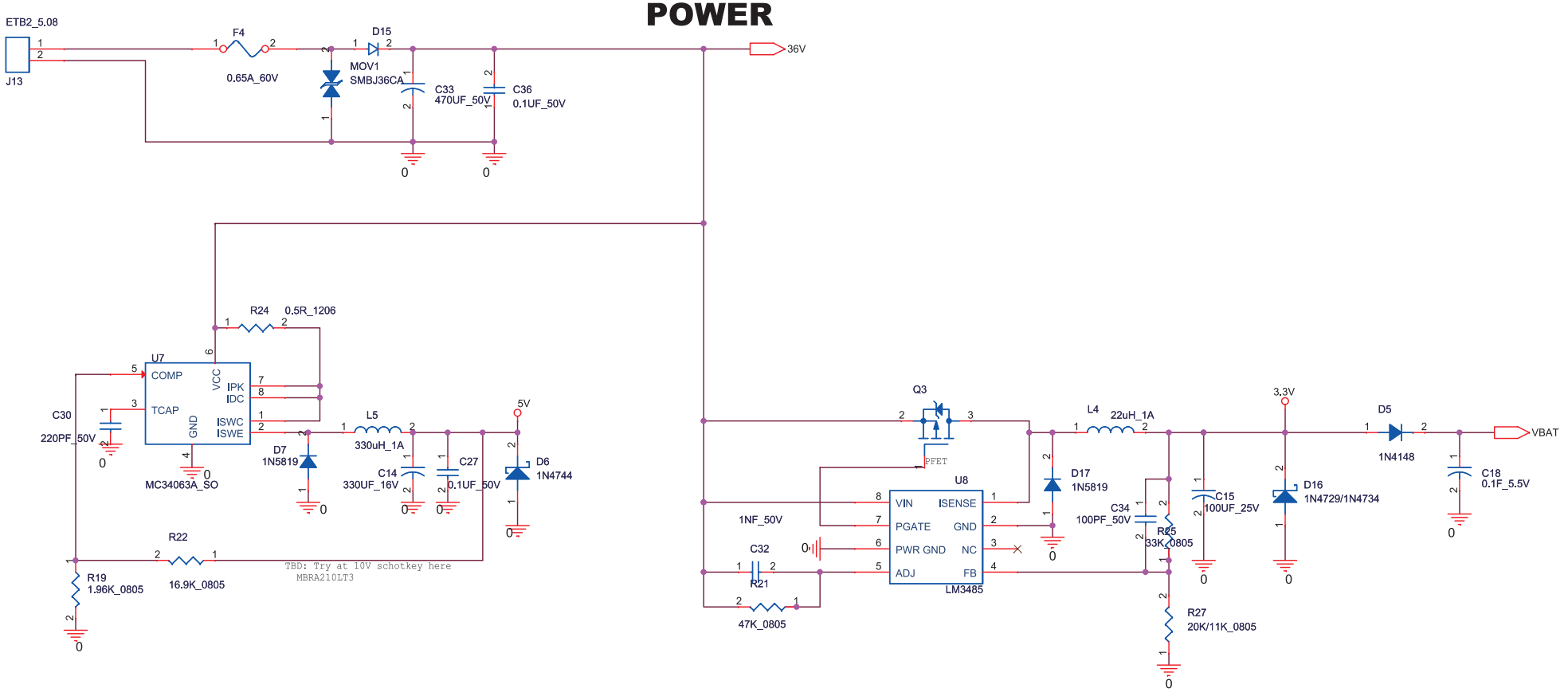

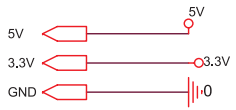

NOTE :

VCC=5V , R15=11K

VCC=3.3V, R15=20K

Title <Title>		
Size B	Document Number <Doc>	Rev <RevCode>
Date: Wednesday, March 04, 2015	Sheet 4 of 7	

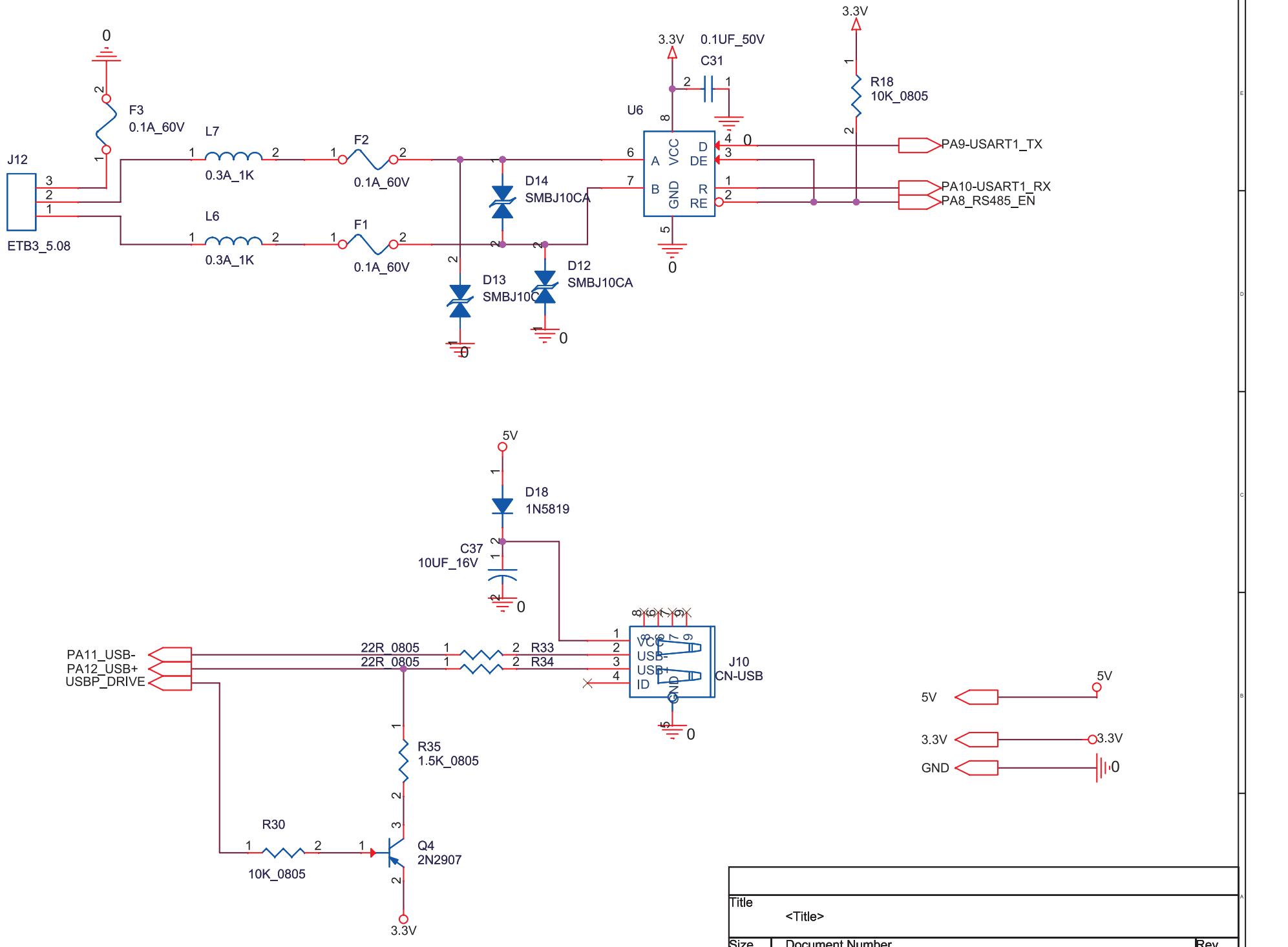

Title	<Title>	
Size A	Document Number <Doc>	Rev <RevCode>
Date: Wednesday, March 04, 2015	Sheet 5 of 7	