Arduino Learning Kit v1.3 (PAGE 1)

ARDUINO & ESP32 Module

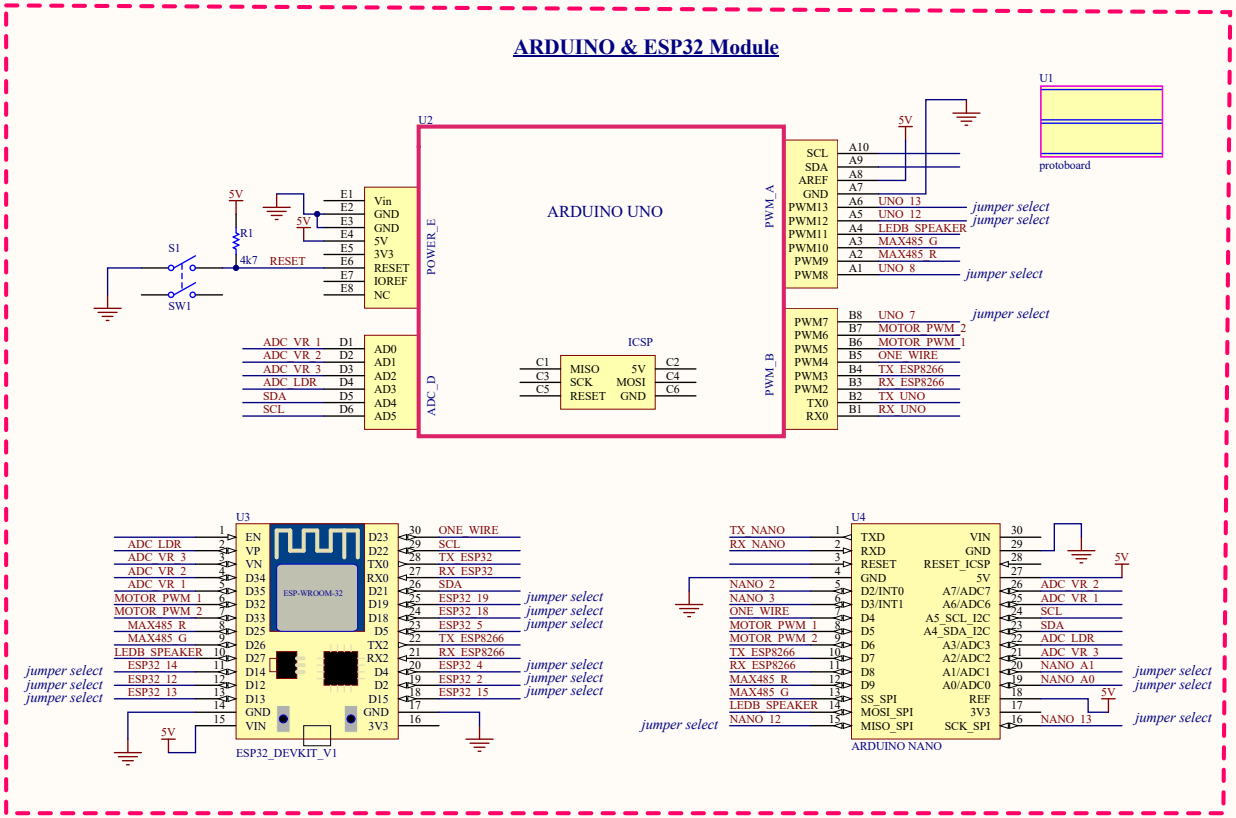

ESP8266 WeMOS WIFI

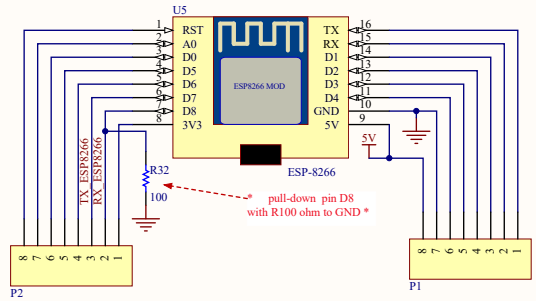

File format (.png) not supported

Title	Arduino Learning Kit V1.3		
Size A3	Number 1		Revision
Date:	18/4/2020	Sheet of	4
File:	D:\WORKS\...\arduino_learning_kit_v1.3_sch.ddb	Drawn By:	

Arduino Learning Kit v1.3 (PAGE 2)

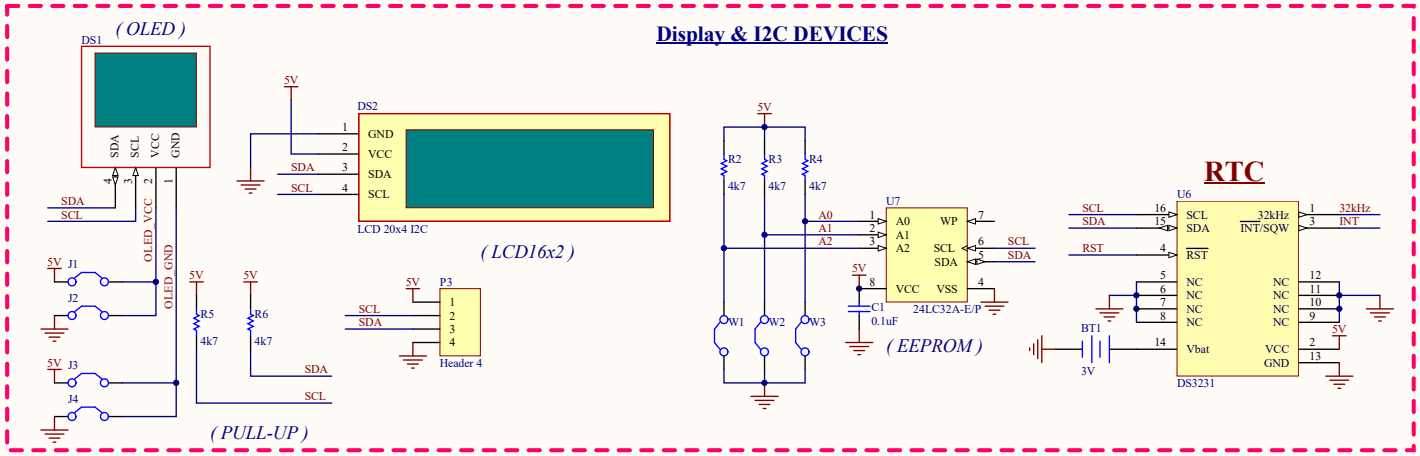

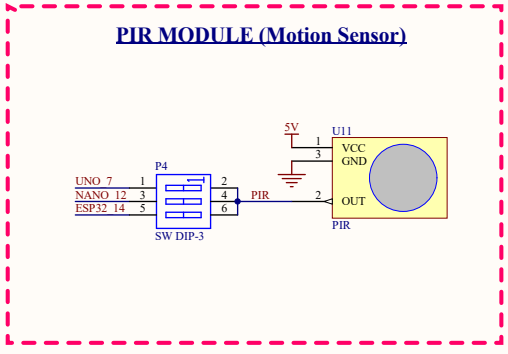

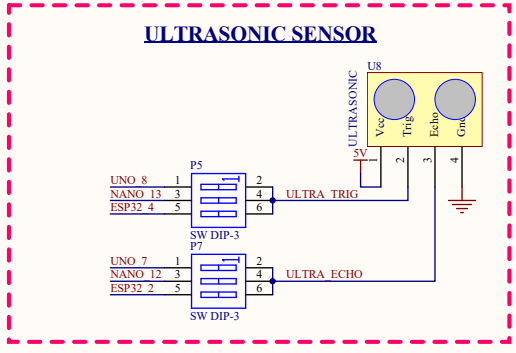

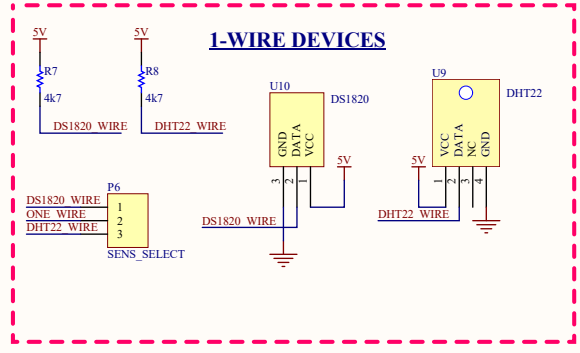

File format (.png) not supported

Title	Arduino Learning Kit V1.3		
Size A3	Number 2		Revision
Date:	18/4/2020	Sheet of	4
File:	D:\WORKS\..\arduino_learning_kit_v1.3_sch_Dpa3.SchDoc		

Arduino Learning Kit v1.3 (PAGE 3)

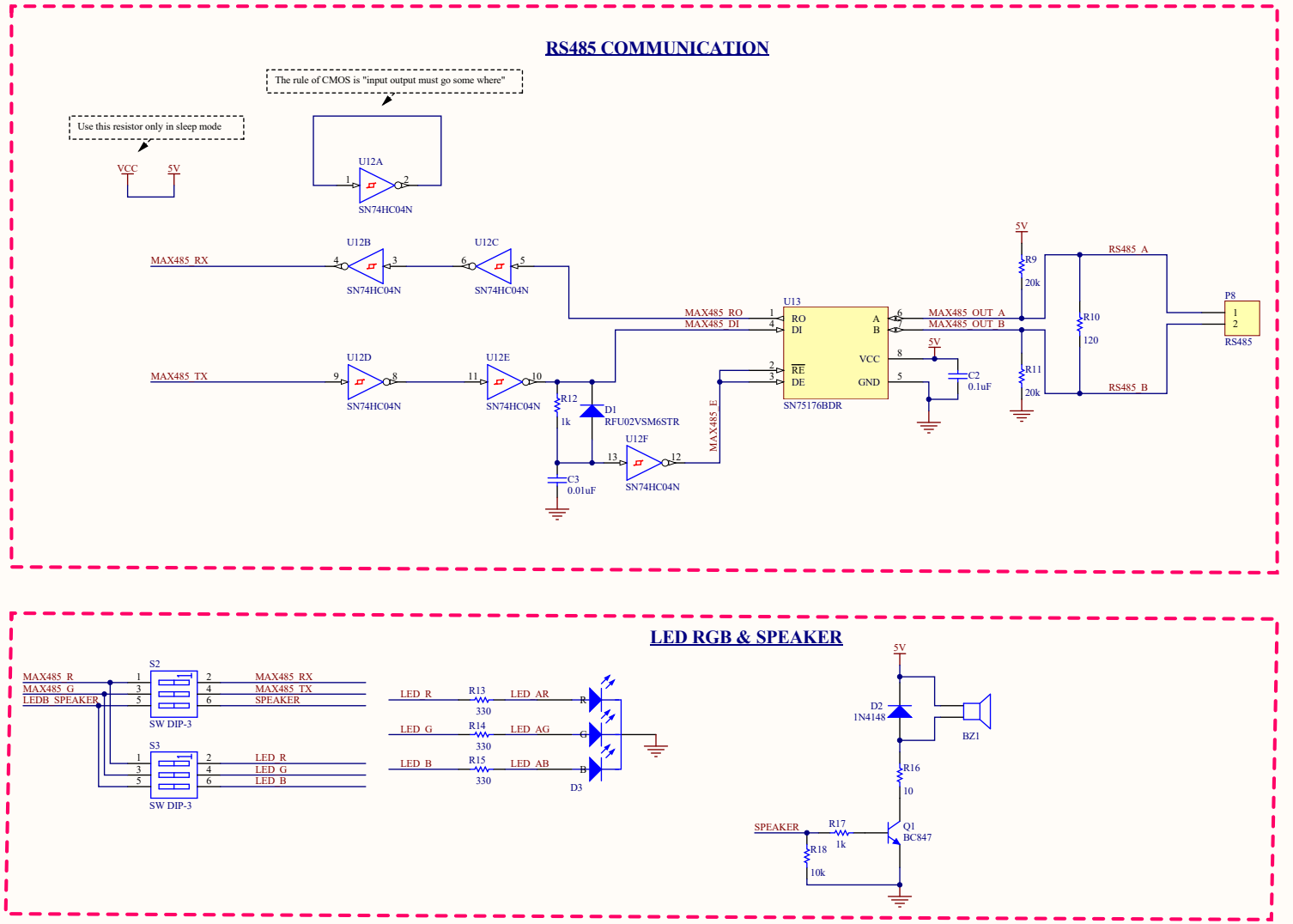

File format (.png) not supported

Title	Arduino Learning Kit V1.3		
Size A3	Number 3		Revision
Date: 18/4/2020		Sheet of 4	
File: D:\WORKs\..\arduino_learning_kit_v1.3_sch.pdf.doc		Drawn By:	

Arduino Learning Kit v1.3 (PAGE 4)

DC MOTPWN SIGNAL

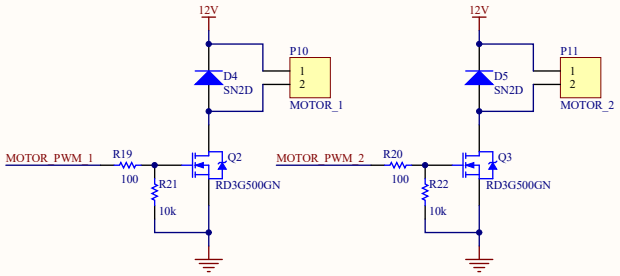

TM1638_7-SEGMENT MODULE

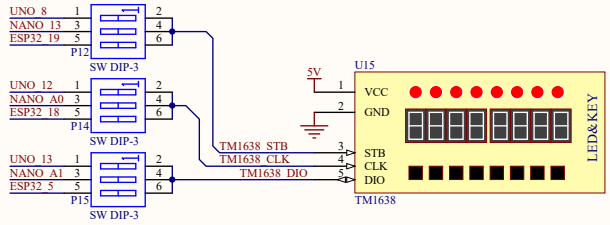

DELAY 2CH MODULE

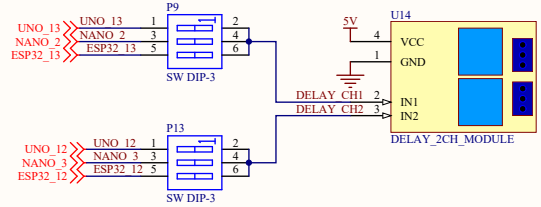

STEPPING MOTOR

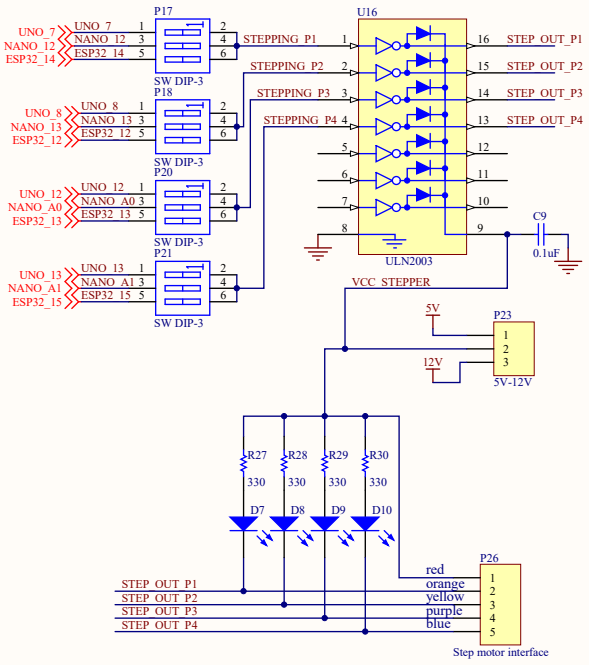

POTENTIONMETER

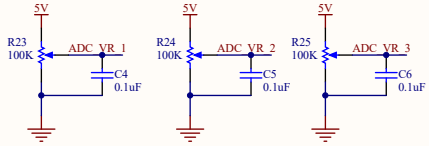

LDR SENSOR

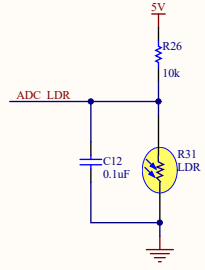

POWER SUPPLY

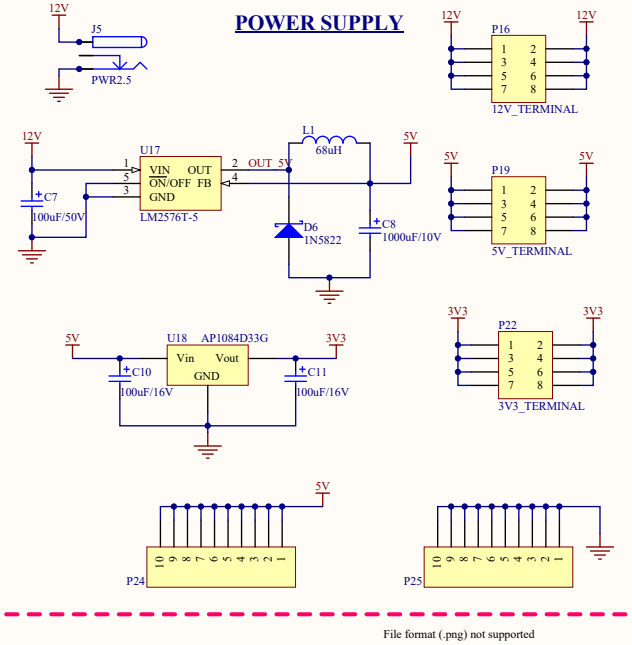

File format (.png) not supported

Title: Arduino Learning Kit V1.3		
Size: A3	Number: 4	Revision:
Date: 18/4/2020	Sheet of 4	
File: D:\WORKS\...\arduino_learning_kit_v1.3_sch_PAGE4.SchDoc	Drawn By:	

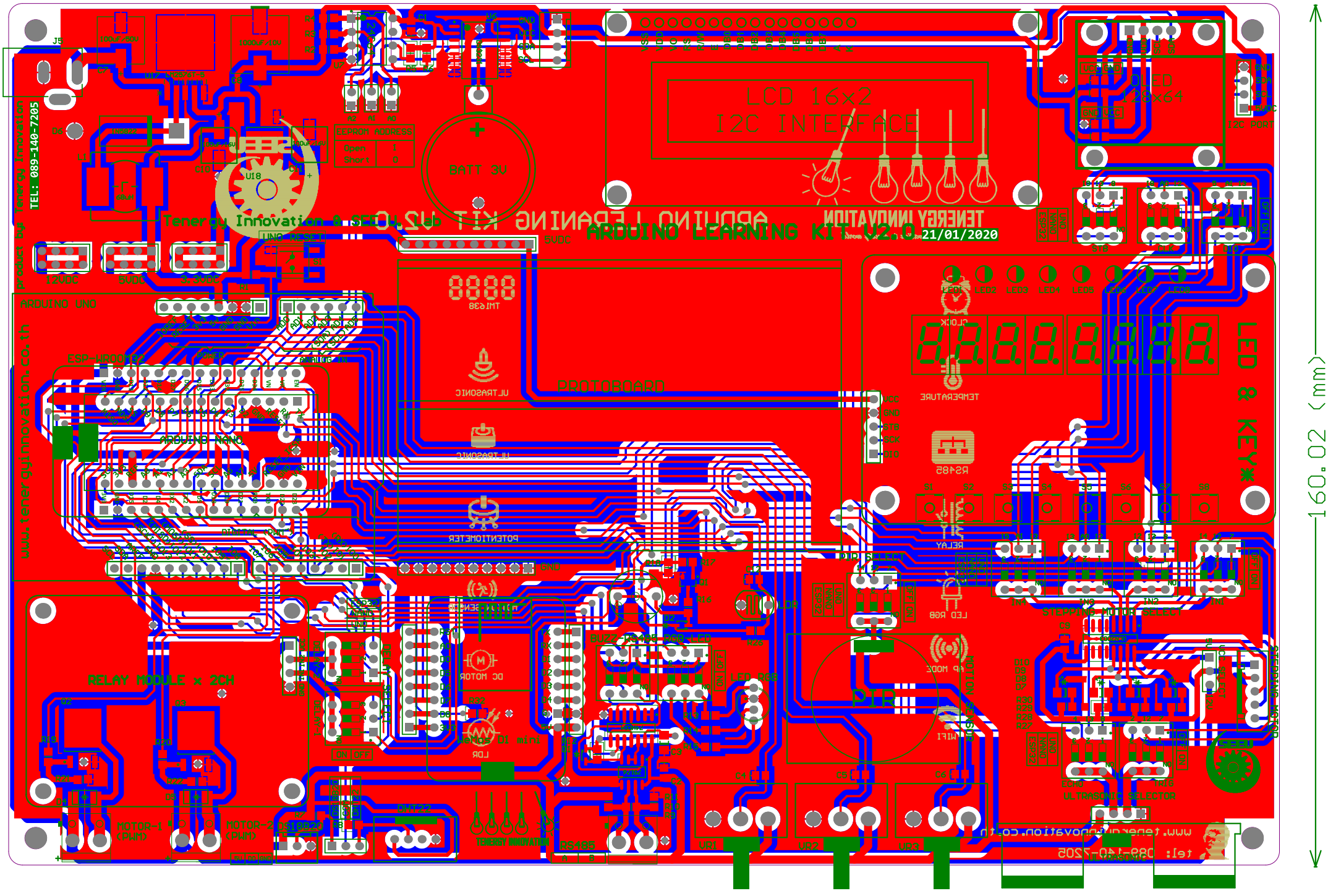
234.823 (mm)
160.02 (mm)
LCD 16x2
I2C INTERFACE
ARDUINO LEARNING KIT V2.0
21/01/2020
Tenergy Innovation & Service
TEL: 089-140-7205
www.tenergyinnovation.co.th
ARDUINO UNO
ARDUINO NANO
ESP-WROOM-32
RELAY MODULE x 2CH
PROTOBOARD
LED & KEY
TEMPERATURE
RS485
RELAY
LED RGB
AP MODE
WIFI
ULTRASONIC
POTENTIOMETER
DC MOTOR
LDR
MOTION SENSOR
BATT 3V
LCD 16x2
I2C INTERFACE
LED 128x64
I2C PORT
LED 8 KEY
CLOCK
TEMPERATURE
RS485
RELAY
LED RGB
AP MODE
WIFI
ULTRASONIC
POTENTIOMETER
DC MOTOR
LDR
MOTION SENSOR
BATT 3V
LCD 16x2
I2C INTERFACE
ARDUINO LEARNING KIT V2.0
TEL: 089-140-7205
www.tenergyinnovation.co.th
tel: 089-140-7205

Comment	Description	Designator	Footprint	LibRef	Quantity
3V	Multicell Battery	BT1	BATTERY 3.3V	Battery	1
BUZZER	Loudspeaker	BZ1	buzzer	Speaker	1
Cap	Capacitor	C1, C2, C4, C5, C6, C9, C12	0805	Cap	7
Cap	Capacitor	C3	1206	Cap	1
100uF	Polarized Capacitor (Axial)	C7	100uF/ 50V SMD	Cap Pol2	1
100uF	Polarized Capacitor (Axial)	C8	1000uF/ 10V SMD	Cap Pol2	1
100uF	Polarized Capacitor (Axial)	C10, C11	100uF/ 16V SMD	Cap Pol2	2
RFU02V SM6STR	1 Amp General Purpose Rectifier	D1	SOD-323	Diode 1N4002	1
1N4148	1 Amp General Purpose Rectifier	D2	SOD-323	Diode 1N4002	1
LED_RGB_CC		D3	LED RGB_5mm	LED_RGB_CC	1
SN2D	1 Amp General Purpose Rectifier	D4, D5	DO-214	Diode 1N4002	2
1N5822	Schottky Rectifier	D6	1N5822	Diode 10TQ045	1
	Typical INFRARED GaAs LED	D7, D8, D9, D10	1206	LED0	4
OLCD 0.96 INC 128x64_V 2		DS1	OLED_0.96INCH_V 2	OLCD 0.96 INC 128x64_V 2	1
LCD 20x4 I2C		DS2	LCD16x2 I2C - V 2	LCD 20x4 I2C	1
Jumper	Jumper Wire	J1, J2, J3, J4	0805	Jumper	4
PWR2.5	Low Voltage Power Supply Connector	J5	KLD-0202	PWR2.5	1
Inductor	Inductor	L1	L68uH_TOP	Inductor	1
	Header, 8-Pin	P1, P2	HDR1X8	Header 8	2
Header 4	Header, 4-Pin	P3	HDR1X4	Header 4	1
SW DIP-3	DIP Switch, 3 Position, SPST	P4, P5, P7, P9, P12, P13, P14, P15, P17, P18, P20, P21, S2, S3	SLID_SWITCH_3CH	SW DIP-3	14
SENS_SELECT	Header, 3-Pin	P6	HDR1X3	Header 3	1
RS485	Header, 2-Pin	P8	DG300-02P_2PINS	Header 2	1
MOTOR_1	Header, 2-Pin	P10	DG300-02P_2PINS	Header 2	1
MOTOR_2	Header, 2-Pin	P11	DG300-02P_2PINS	Header 2	1
12V_TERMINAL	Header, 4-Pin, Dual row	P16	HDR2X4	Header 4X2	1
5V_TERMINAL	Header, 4-Pin, Dual row	P19	HDR2X4	Header 4X2	1
3V3_TERMINAL	Header, 4-Pin, Dual row	P22	HDR2X4	Header 4X2	1
5V -12V	Header, 3-Pin	P23	HDR1X3	Header 3	1
Header 10	Header, 10-Pin	P24, P25	HDR1X10	Header 10	2
Step motor interface	Header, 5-Pin	P26	HDR 5 PIN 2.5mm	Header 5	1
BC847	NPN Bipolar Transistor	Q1	KTC8550S	NPN	1
RD3G500GN	N-Channel Power MOSFET	Q2, Q3	TO252-3M	NMOS-2	2
	Resistor	R1, R2, R3, R4, R5, R6, R7, R8, R9, R10, R11, R12, R13, R14, R15, R16, R17, R18, R19, R20, R21, R22, R26, R27, R28, R29, R30, R32	6-0805_M	Res1	28
RPot	Potentiometer	R23, R24, R25	Potentiometer	RPot	3
LDR		R31	LDR	LDR	1
SW1	Double-Pole, Single-Throw Switch	S1	Tactile Switches SMD	SW-DPST	1
protoboard		U1	PROTOBOARD_54x82mm	protoboard	1
ARDUINO UNO		U2	ARDUINO UNO R3 -V 2	ARDUINO UNO	1
ESP32_DEV KIT_V 1	ESP32_DEV KIT_V 1	U3	ESP32_DEV KIT_V 1	ESP32_DEV KIT_V 1	1
ARDUINO NANO	ARDUINO NANO	U4	ARDUINO_NANO	ARDUINO NANO	1
ESP-8266	WeMos mini NodeMCU WIFI ESP-8266	U5	ESP8266	ESP-8266	1
DS3231	RTC Extremely Accurate I2C-Integrate	U6	SOIC16W_N	DS3231	1
24LC32A-E/ P	32Kbit, 400kHz, 2.5V, I2C Serial EEPROM, 8-Pin PDIP, Extended Temperature	U7	PDIP300-P8	24LC32A-E/ P	1
ULTRASONIC	Digital-output relative humidity & temperature sensor/ module	U8	ULTRASONIC	ULTRASONIC	1
DHT22	Digital-output relative humidity & temperature sensor/ module	U9	DHT22_4PIN	DHT22	1
DS1820	IC Programmer Resolution, 1-Wire digital Thermometer	U10	HDR 3 PIN	DS1820	1
PIR	Motion Sensor Module HC-SR501	U11	PIR	PIR	1
SN74HC04N	Hex Schmitt-Trigger Inverter	U12	SOIC14T_M	SN74HC14N	1
SN75176BDR	DIFFERENTIAL BUS TRANSCEIVER RS-485/ RS-422	U13	SOIC8_L	MAX485	1
DELAY_2CH_MODULE	2-CHANNEL DELAY MODULE	U14	2CHANNEL_DELAY V3	DELAY_2CH_MODULE	1
TM1638	7 SEGMENT ARRAY LED & KEY - IC TM1638	U15	TM1638 - V 2	TM1638	1
ULN2003	IC	U16	SOIC-SL16_M	ULN2003	1
LM2576T-5	Easy Switcher 3.0A Step-Down Voltage Regulator	U17	LM2576SX-5.0/ NOPB	LM2576T-5	1
AP1084D33G	Voltage Regulator	U18	TO252-3M	Volt Reg	1
Jumper	Jumper Wire	W1, W2, W3	HDR1X2	Jumper	3