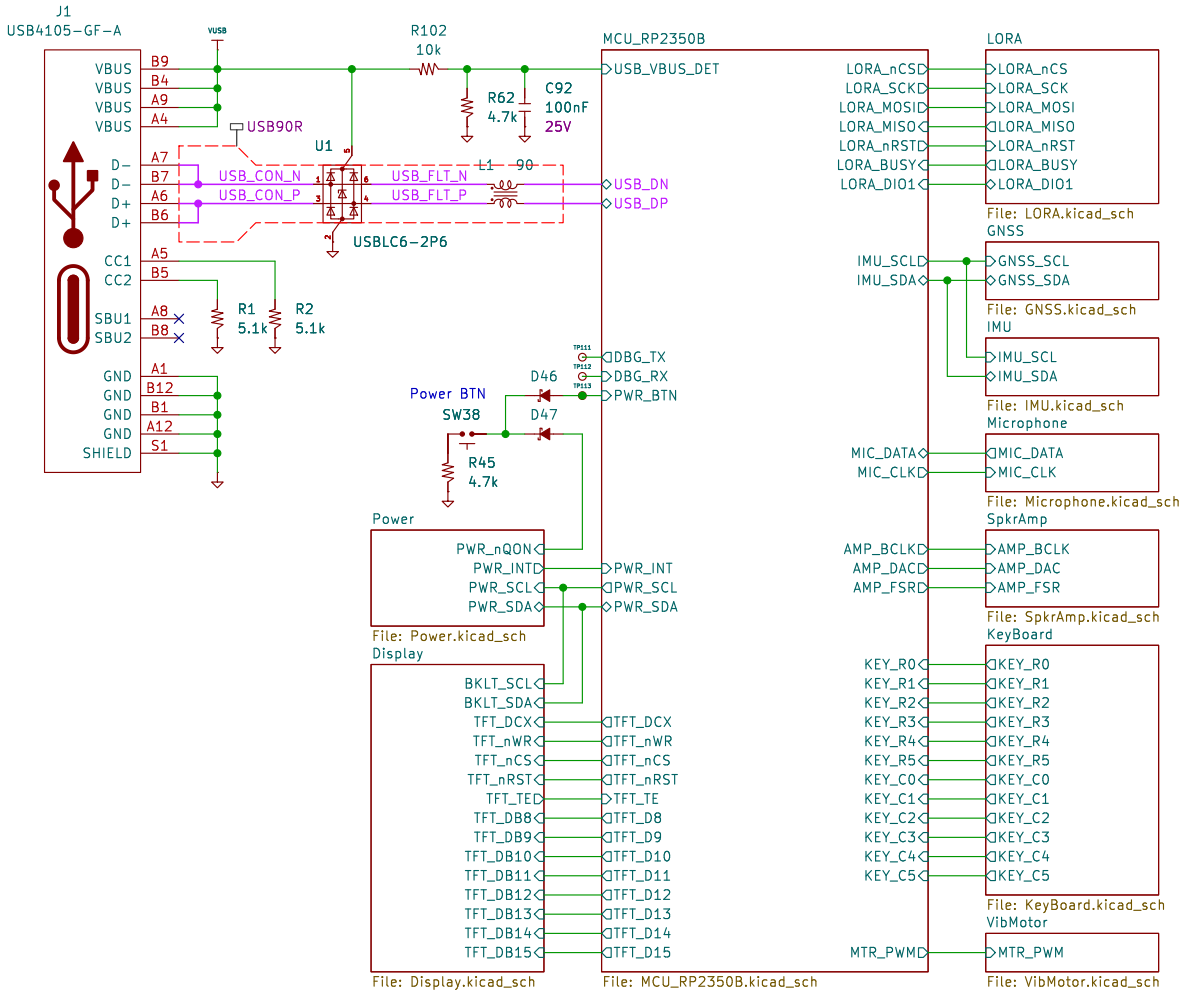

CERN-OHL-S v2 © 2026 Terry Wang
https://github.com/tengigabytes/MokyaLora

Sheet: /
File: MokyaLora.kicad_sch

**Title: MokyaLora**

| Size: A4 | Date: 2026-03-22 | Rev: A |
|---|---|---|
| KiCad E.D.A. 9.0.7 | | Id: 1/11 |

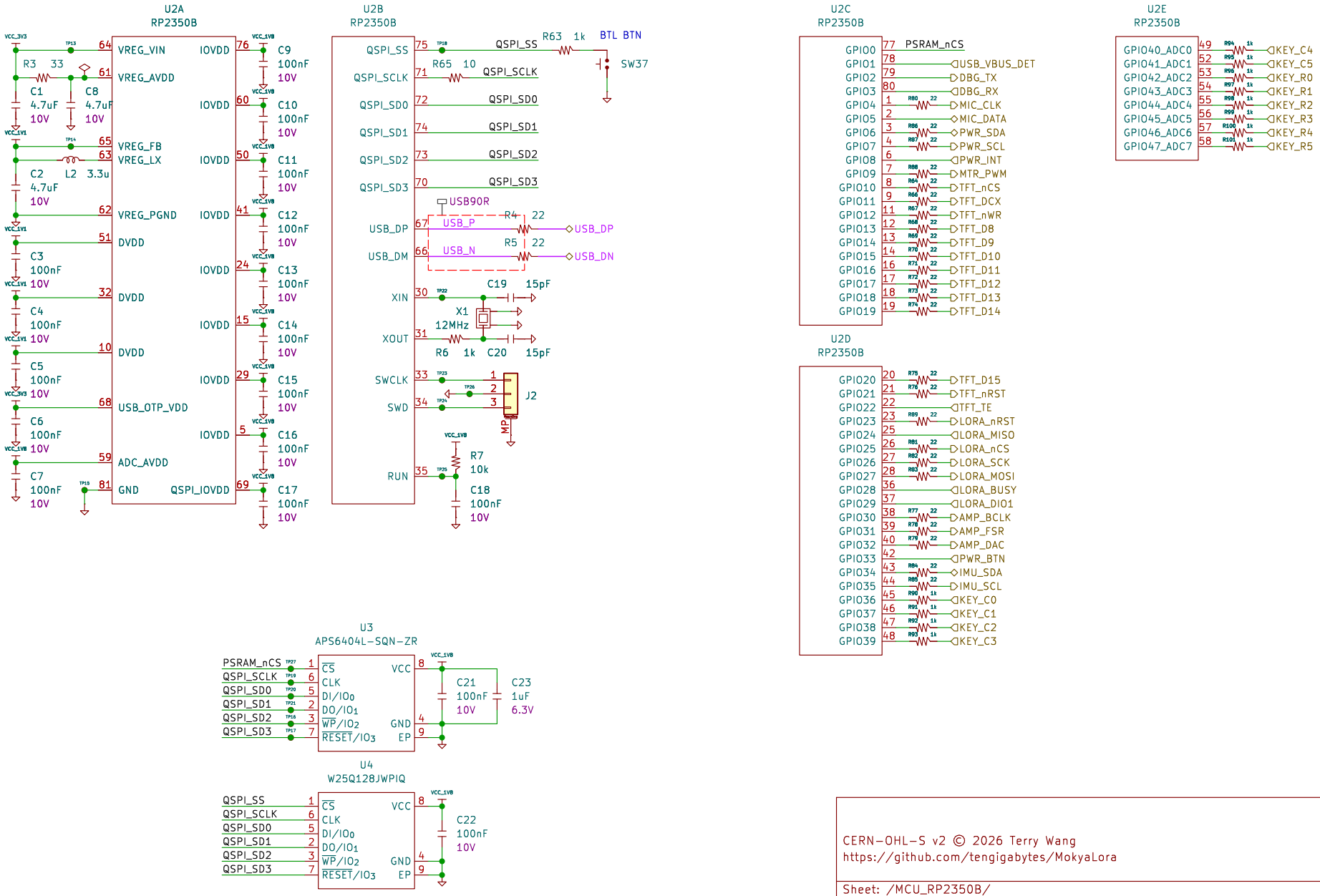


CERN-OHL-S v2 © 2026 Terry Wang
https://github.com/tengigabytes/MokyaLora

Sheet: /MCU_RP2350B/
File: MCU_RP2350B.kicad_sch

**Title:**

| | | |
|---|---|---|
| Size: A4 | Date: 2026-03-22 | Rev: A |
| KiCad E.D.A. 9.0.7 | | Id: 2/11 |

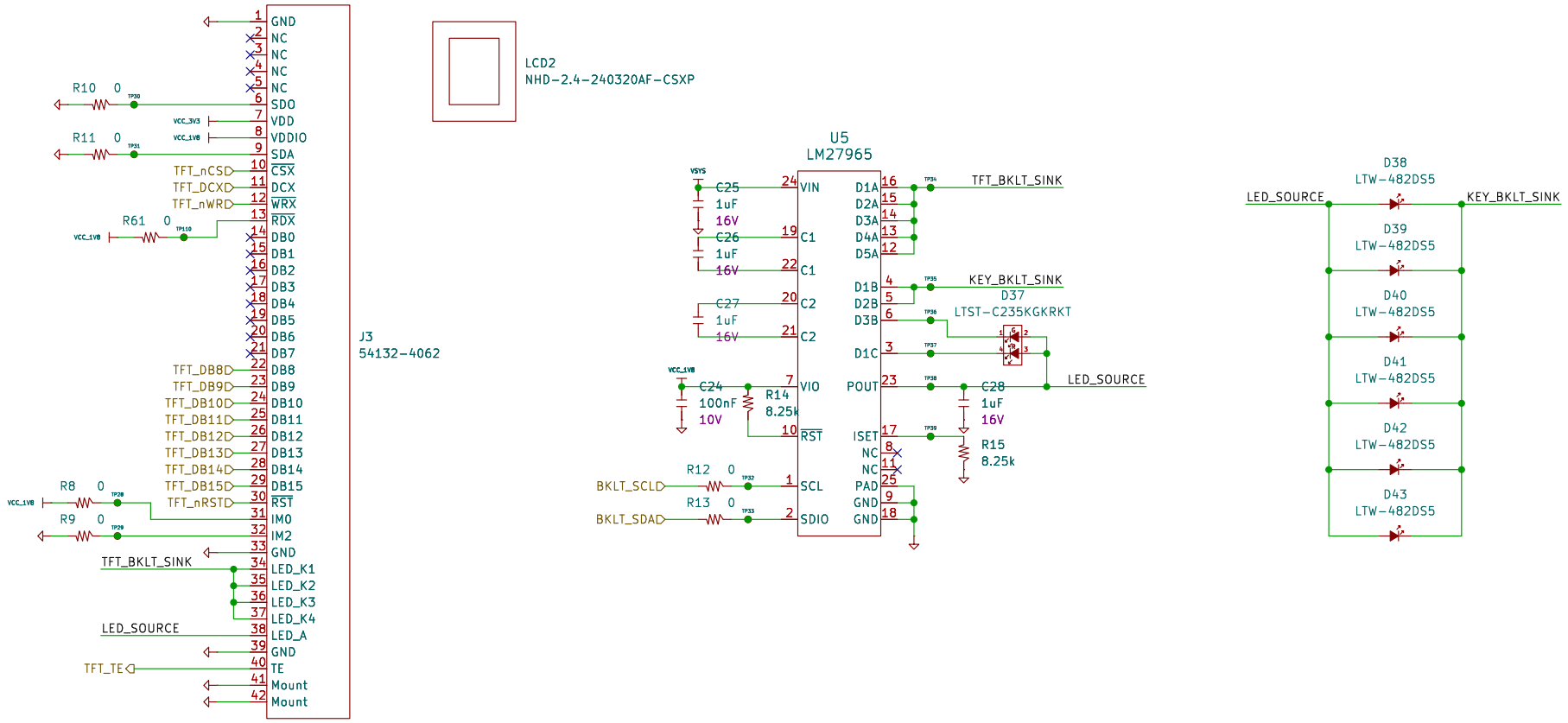


CERN-OHL-S v2 © 2026 Terry Wang
https://github.com/tengigabytes/MokyaLora

Sheet: /Display/
File: Display.kicad_sch

**Title:**

| | | |
|---|---|---|
| Size: A4 | Date: 2026-03-22 | **Rev: A** |
| KiCad E.D.A. 9.0.7 | | Id: 3/11 |

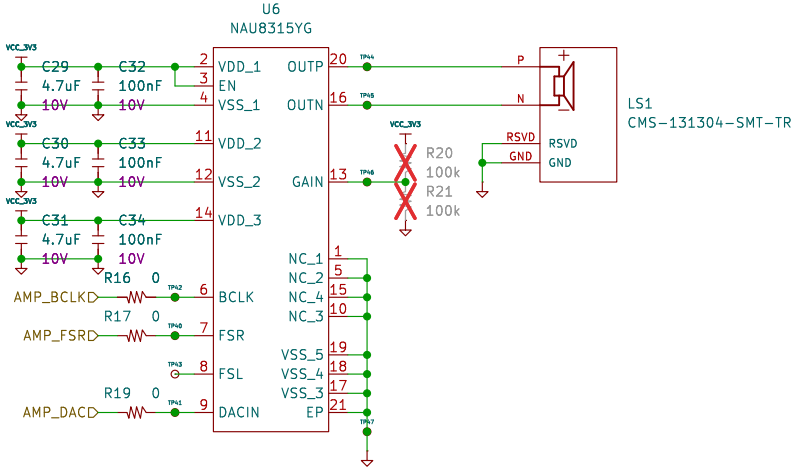


CERN-OHL-S v2 © 2026 Terry Wang
https://github.com/tengigabytes/MokyaLora

Sheet: /SpkrAmp/
File: SpkrAmp.kicad_sch

**Title:**

| | | |
|---|---|---|
| Size: A4 | Date: 2026-03-22 | **Rev: A** |
| KiCad E.D.A. 9.0.7 | | Id: 4/11 |

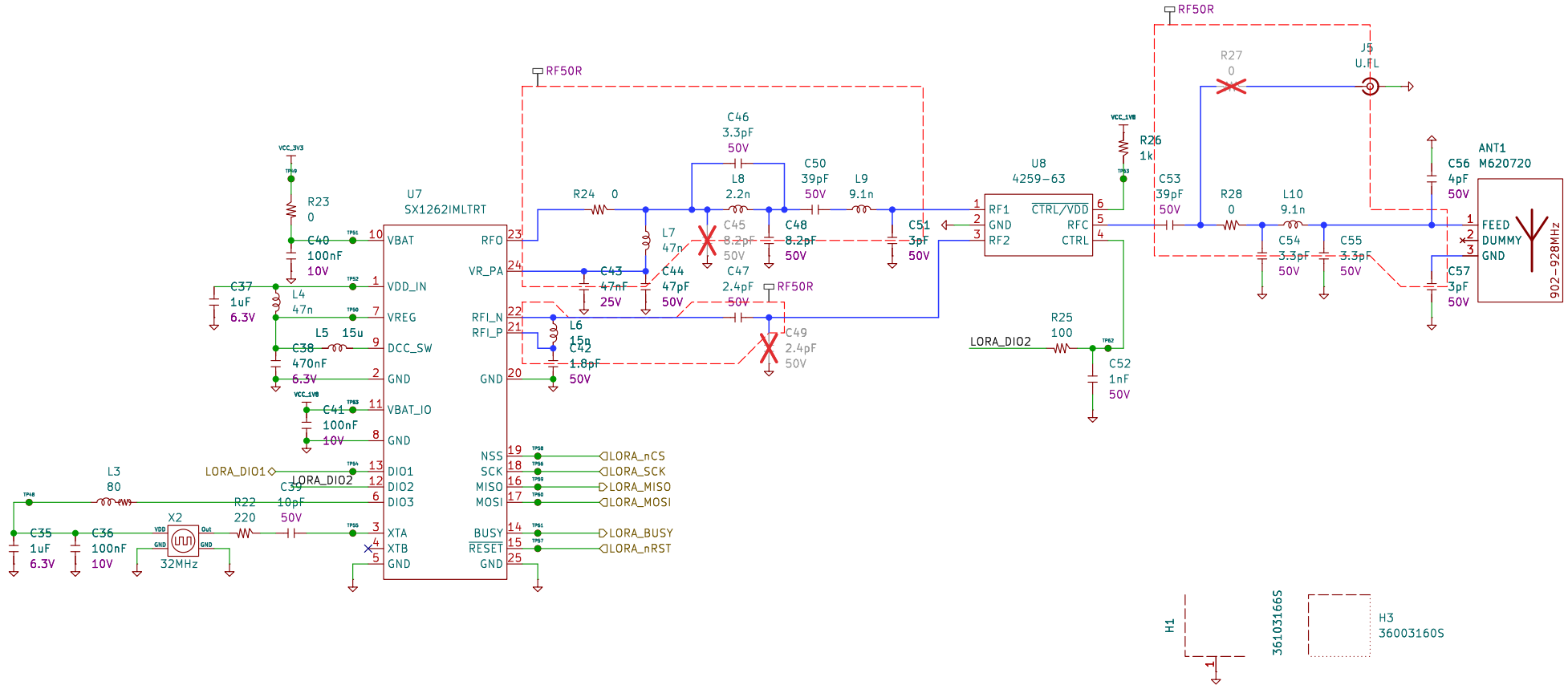


Spare MLCC:0.1pF, 0.2pF, 0.3pF, 0.5pF, 0.7pF, 1pF, 1.5pF, 1.8pF, 2pF, 2.2pF, 2.7pF, 3pF, 3.3pF, 3.9pF, 4pF, 4.7pF, 5.6pF, 6.8pF, 8.2pF

| | | | | | | | | | | | | |
|---|---|---|---|---|---|---|---|---|---|---|---|---|
| C93 | C94 | C95 | C96 | C97 | C98 | C99 | C100 | C101 | C103 | C102 | C104 | C105 |
| 1pF | 1.5pF | 1.8pF | 2pF | 2.2pF | 2.7pF | 3pF | 3.3pF | 4.3pF | 4.7pF | 5.6pF | 6.8pF | 8.2pF |
| 50V | 50V | 50V | 50V | 50V | 50V | 50V | 50V | 50V | 50V | 50V | 50V | 50V |

Spare inductor: 3.3nH, 3.9nH, 4.7nH, 5.6nH, 6.8nH, 8.2nH, 9.1nH, 10nH, 12nH, 15nH, 18nH

| | | | | | | | | | | | | |
|---|---|---|---|---|---|---|---|---|---|---|---|---|
| L14 | L15 | L16 | L17 | L18 | L19 | L20 | L21 | L22 | L23 | L24 | L25 |
| 2.2n | 3.3n | 3.9n | 4.7n | 5.6n | 6.8n | 8.2n | 9.1n | 10n | 12n | 15n | 18n |

CERN-OHL-S v2 © 2026 Terry Wang
https://github.com/tengigabytes/MokyaLora

Sheet: /LORA/
File: LORA.kicad_sch

**Title:**

| | | |
|---|---|---|
| Size: A4 | Date: 2026-03-22 | Rev: A |
| KiCad E.D.A. 9.0.7 | | Id: 5/11 |

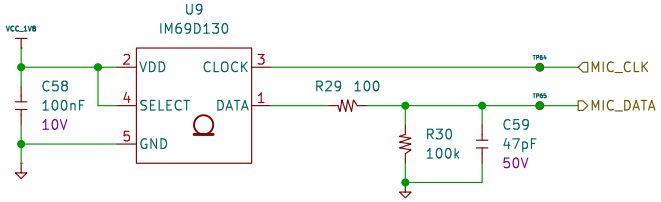


CERN-OHL-S v2 © 2026 Terry Wang
https://github.com/tengigabytes/MokyaLora

Sheet: /Microphone/
File: Microphone.kicad_sch

**Title:**

| | | |
|---|---|---|
| Size: A4 | Date: 2026-03-22 | **Rev: A** |
| KiCad E.D.A. 9.0.7 | | Id: 6/11 |

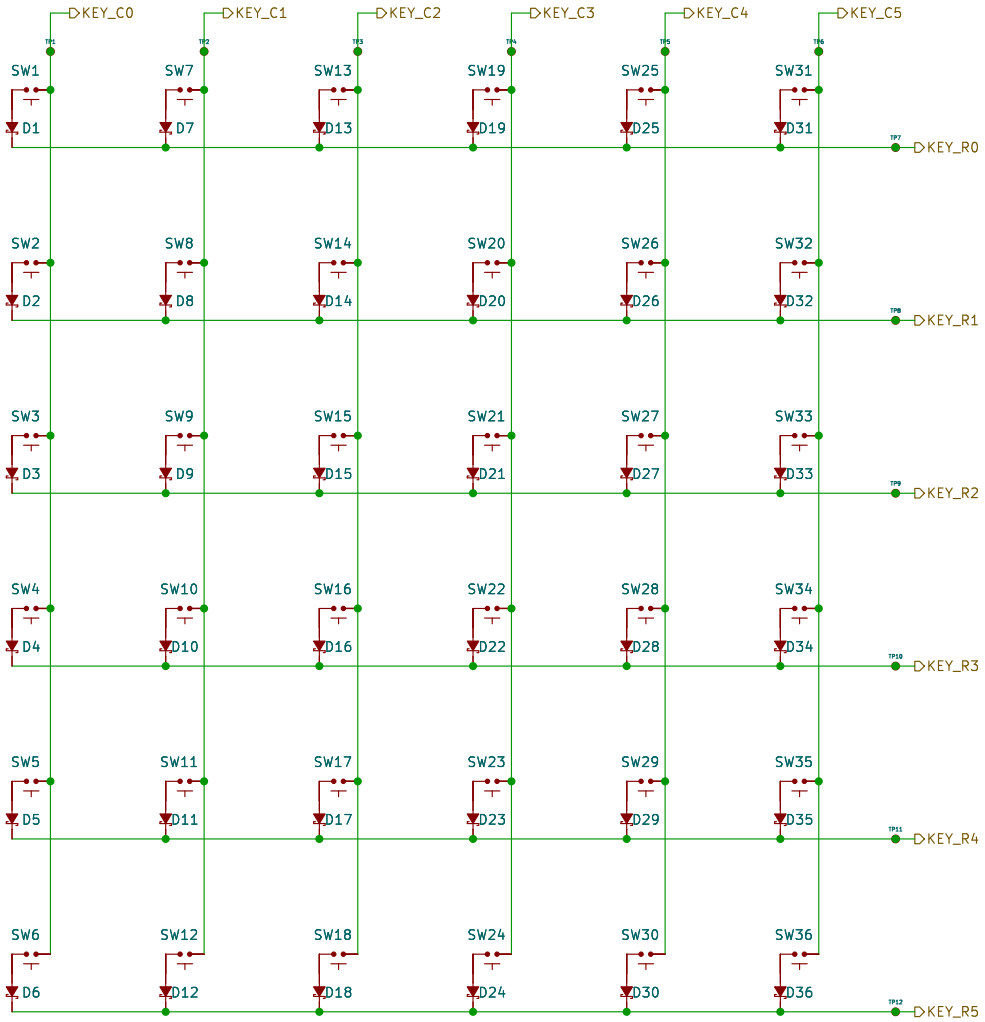


CERN-OHL-S v2 © 2026 Terry Wang
https://github.com/tengigabytes/MokyaLora

Sheet: /KeyBoard/
File: KeyBoard.kicad_sch

**Title:**

| | | |
|---|---|---|
| Size: A4 | Date: 2026-03-22 | **Rev: A** |
| KiCad E.D.A. 9.0.7 | | Id: 7/11 |

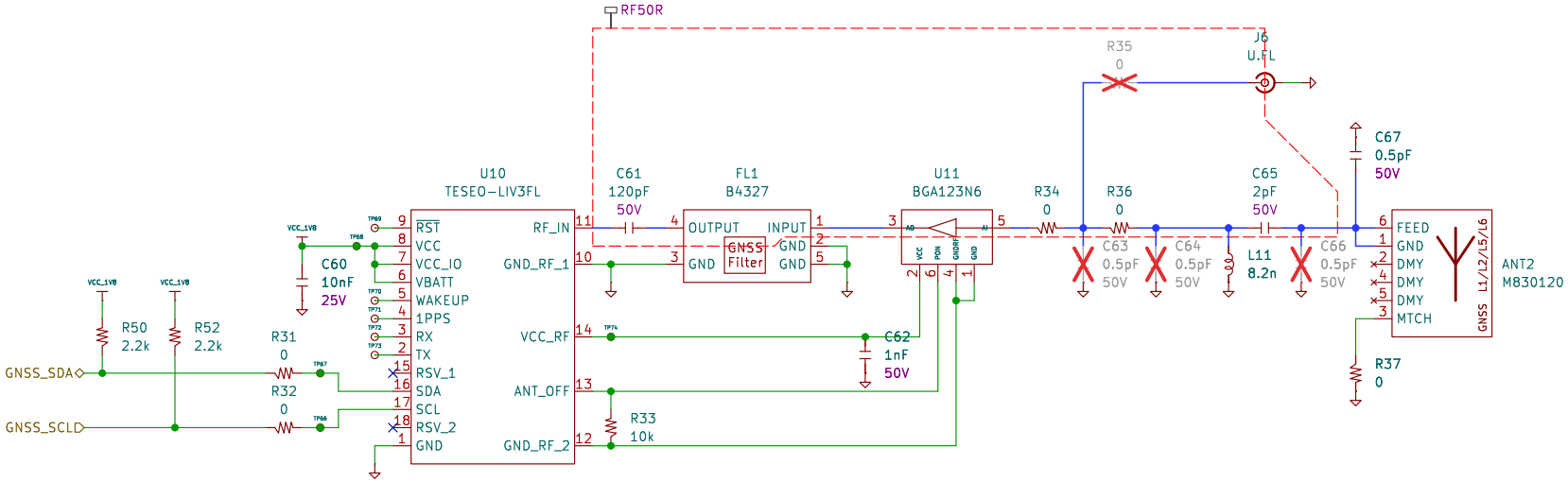


Spare MLCC:0.1pF, 0.2pF, 0.3pF, 0.5pF, 0.7pF, 1pF, 1.5pF, 2pF, 2.7pF, 3.3pF, 4.7pF,
Spare inductor: 3.3nH, 3.9nH, 5.6nH, 6.8nH, 8.2nH, 10nH, 12nH, 15nH, 18nH

CERN-OHL-S v2 © 2026 Terry Wang
https://github.com/tengigabytes/MokyaLora

Sheet: /GNSS/
File: GNSS.kicad_sch

**Title:**

| | | |
|---|---|---|
| Size: A4 | Date: 2026-03-22 | **Rev: A** |
| KiCad E.D.A. 9.0.7 | | Id: 8/11 |

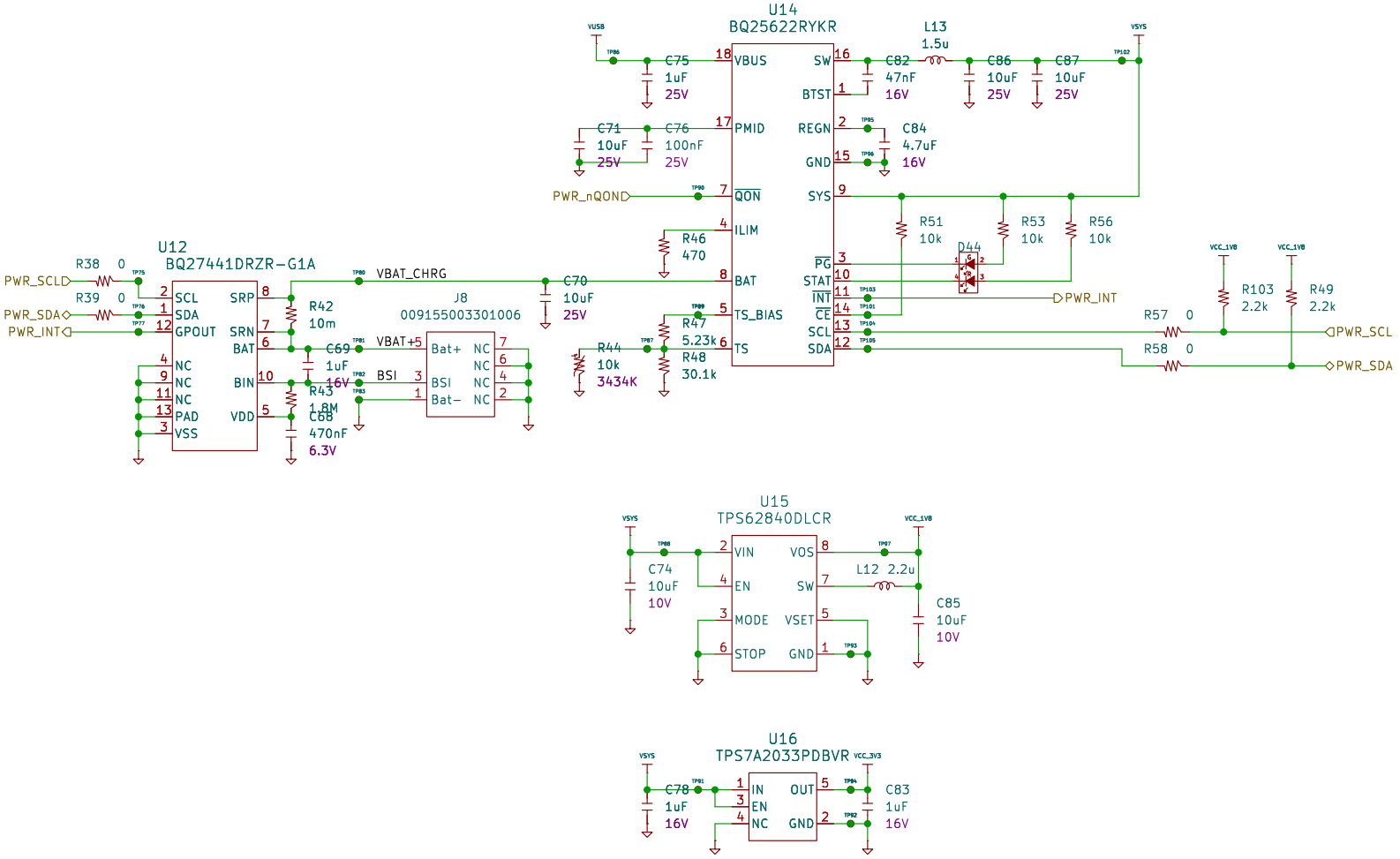


VSYS — PWR_FLAG

VCC_3V3 — PWR_FLAG

VCC_1V8 — PWR_FLAG

CERN-OHL-S v2 © 2026 Terry Wang
https://github.com/tengigabytes/MokyaLora

Sheet: /Power/
File: Power.kicad_sch

**Title:**

| | | |
|---|---|---|
| Size: A4 | Date: 2026-03-22 | **Rev: A** |
| KiCad E.D.A. 9.0.7 | | Id: 9/11 |

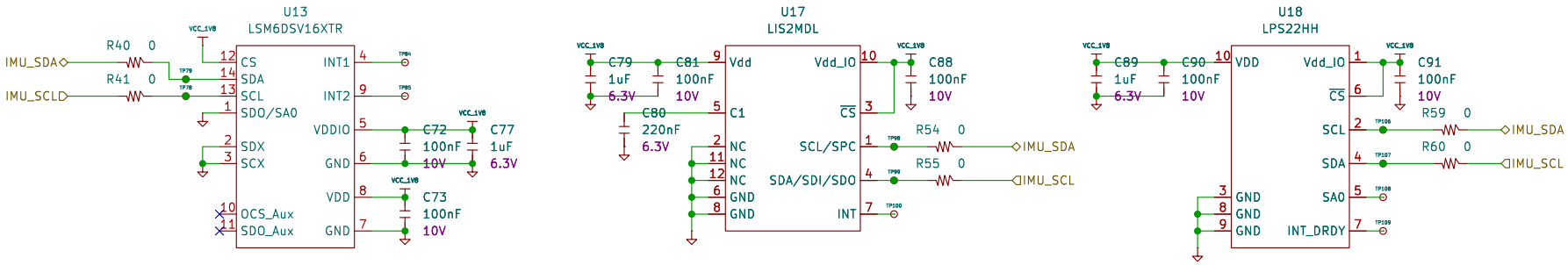


CERN-OHL-S v2 © 2026 Terry Wang
https://github.com/tengigabytes/MokyaLora

Sheet: /IMU/
File: IMU.kicad_sch

**Title:**

| | | |
|---|---|---|
| Size: A4 | Date: 2026-03-22 | **Rev: A** |
| KiCad E.D.A. 9.0.7 | | Id: 10/11 |

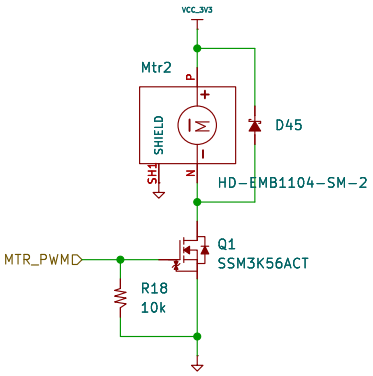


CERN-OHL-S v2 © 2026 Terry Wang
https://github.com/tengigabytes/MokyaLora

Sheet: /VibMotor/
File: VibMotor.kicad_sch

**Title:**

| | | |
|---|---|---|
| Size: A4 | Date: 2026-03-22 | **Rev: A** |
| KiCad E.D.A. 9.0.7 | | Id: 11/11 |