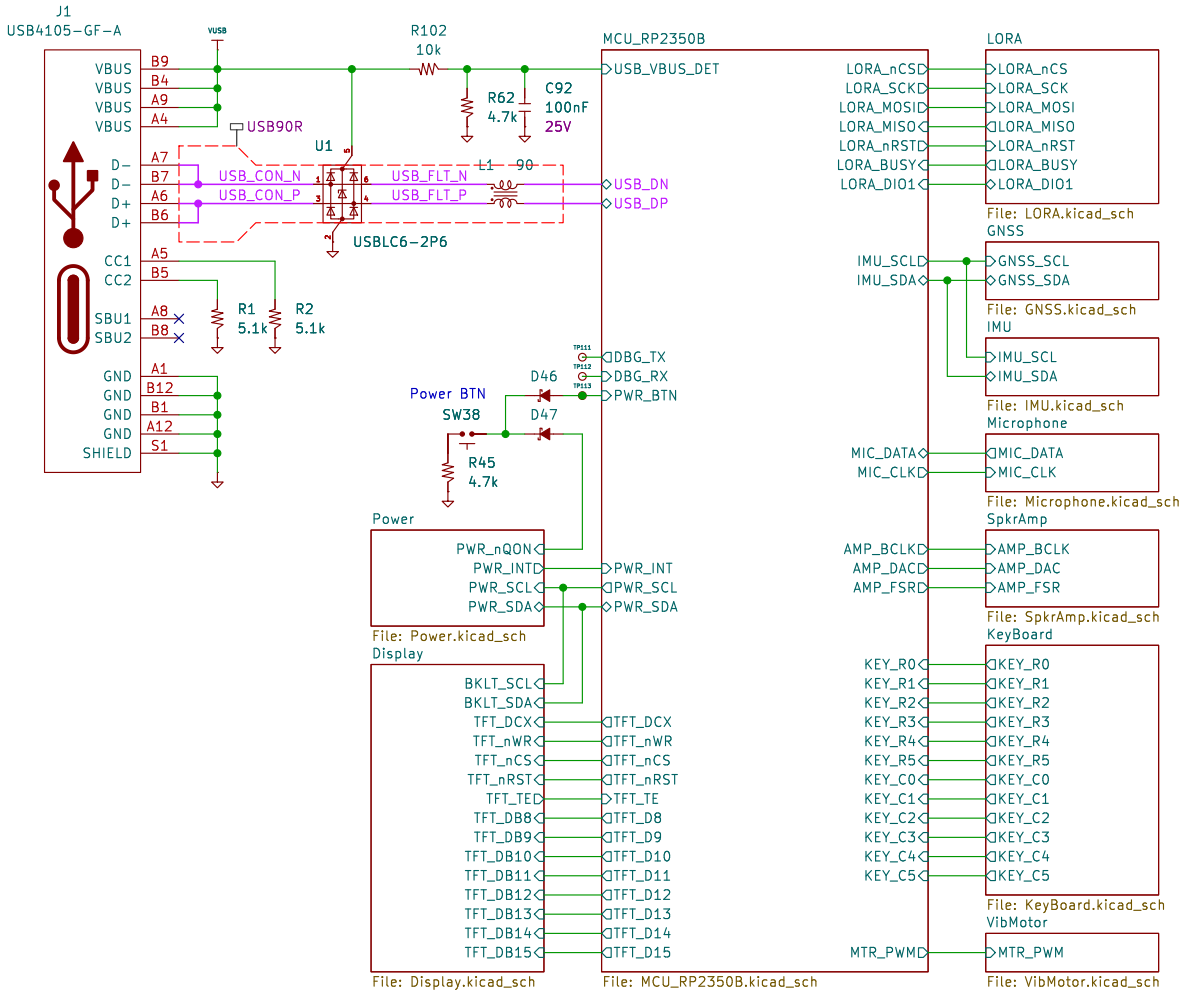

H2
MountingHole_Pad

H4
MountingHole_Pad

VUSB PWR_FLAG

PWR_FLAG

CERN-OHL-S v2 © 2026 Terry Wang
https://github.com/tengigabytes/MokyaLora

Sheet: /
File: MokyaLora.kicad_sch

Title: MokyaLora

Size: A4	Date: 2026-03-22	Rev: A
KiCad E.D.A. 9.0.7		Id: 1/11

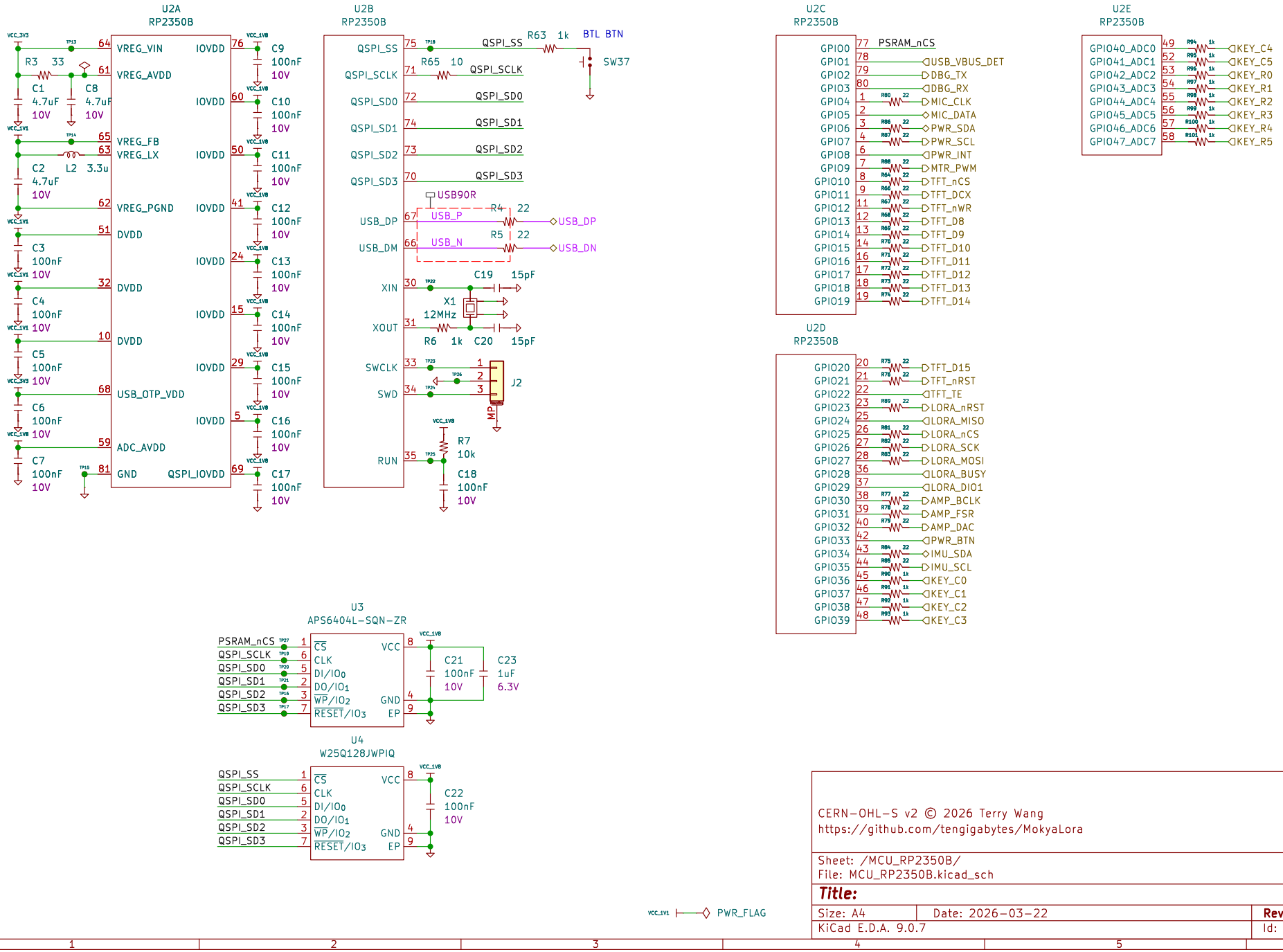

CERN-OHL-S v2 © 2026 Terry Wang
https://github.com/tengigabytes/MokyaLora

Sheet: /MCU_RP2350B/
File: MCU_RP2350B.kicad_sch

Title:

Size: A4	Date: 2026-03-22	Rev: A
KiCad E.D.A. 9.0.7		Id: 2/11

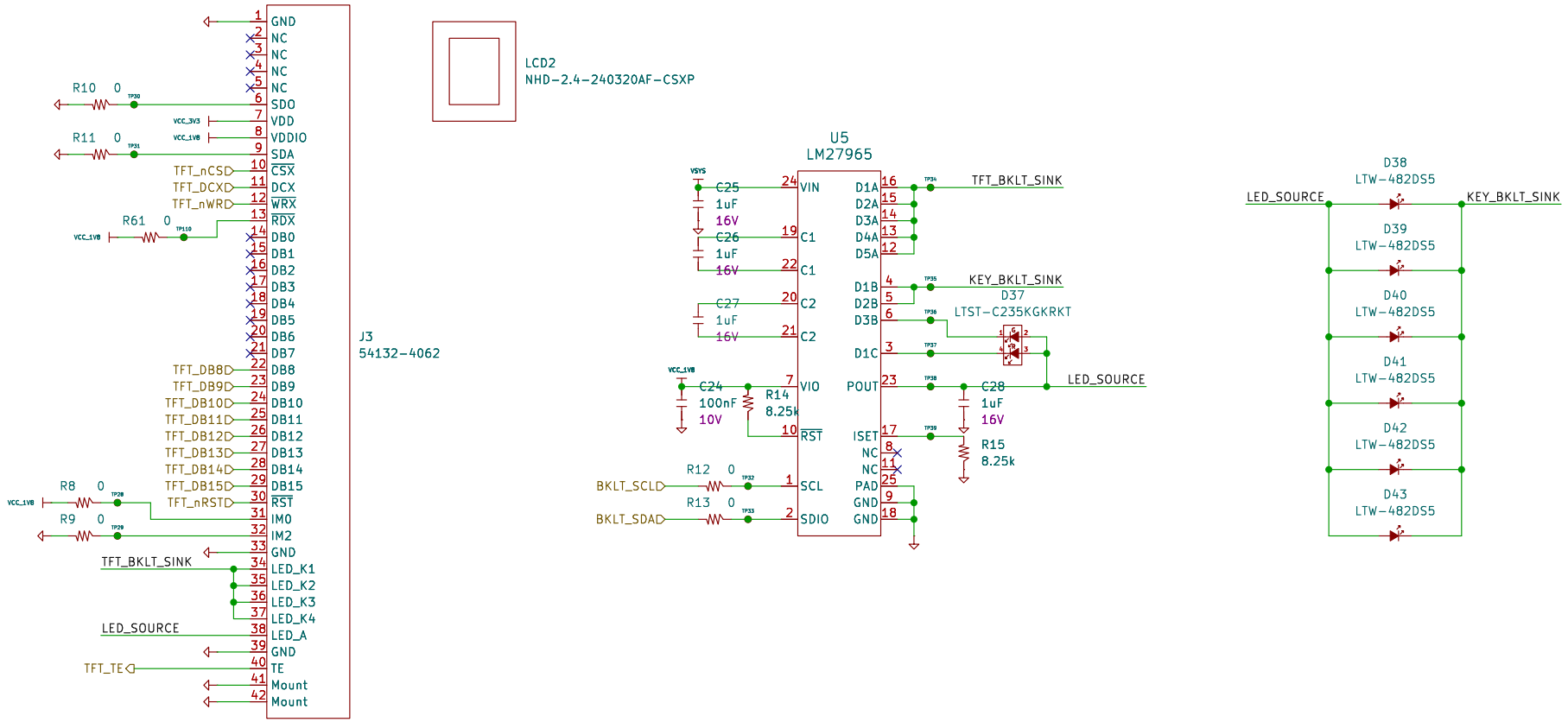

CERN-OHL-S v2 © 2026 Terry Wang
https://github.com/tengigabytes/MokyaLora

Sheet: /Display/
File: Display.kicad_sch

Title:

Size: A4	Date: 2026-03-22	**Rev: A**
KiCad E.D.A. 9.0.7		Id: 4/11

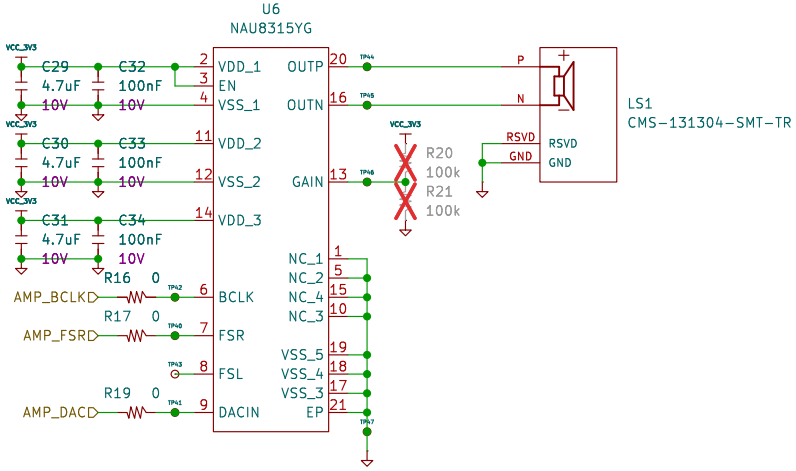

CERN-OHL-S v2 © 2026 Terry Wang
https://github.com/tengigabytes/MokyaLora

Sheet: /SpkrAmp/
File: SpkrAmp.kicad_sch

Title:

Size: A4	Date: 2026-03-22	**Rev: A**
KiCad E.D.A. 9.0.7		Id: 5/11

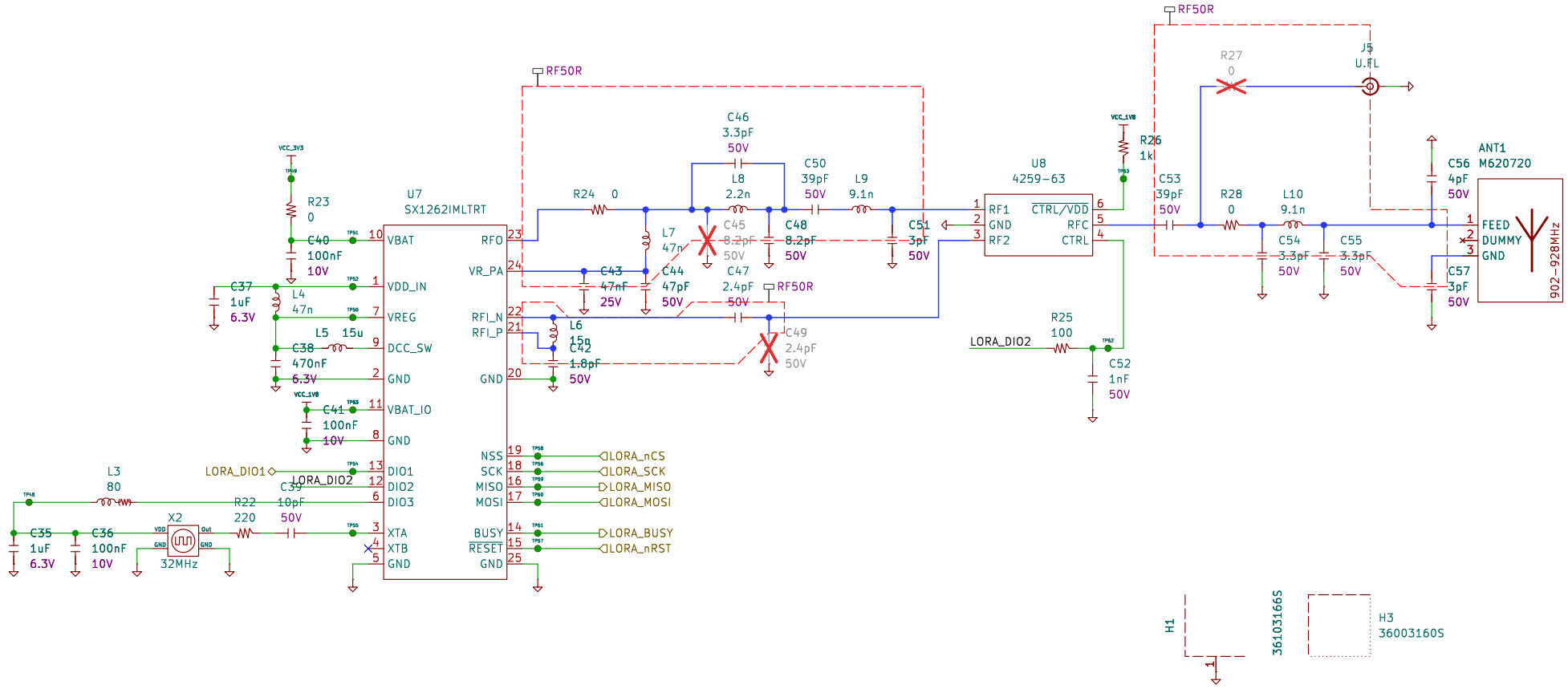

Spare MLCC:0.1pF, 0.2pF, 0.3pF, 0.5pF, 0.7pF, 1pF, 1.5pF, 1.8pF, 2pF, 2.2pF, 2.7pF, 3pF, 3.3pF, 3.9pF, 4pF, 4.7pF, 5.6pF, 6.8pF, 8.2pF

C93	C94	C95	C96	C97	C98	C99	C100	C101	C103	C102	C104	C105
1pF	1.5pF	1.8pF	2pF	2.2pF	2.7pF	3pF	3.3pF	4.3pF	4.7pF	5.6pF	6.8pF	8.2pF
50V	50V	50V	50V	50V	50V	50V	50V	50V	50V	50V	50V	50V

Spare inductor: 3.3nH, 3.9nH, 4.7nH, 5.6nH, 6.8nH, 8.2nH, 9.1nH, 10nH, 12nH, 15nH, 18nH

L14	L15	L16	L17	L18	L19	L20	L21	L22	L23	L24	L25
2.2n	3.3n	3.9n	4.7n	5.6n	6.8n	8.2n	9.1n	10n	12n	15n	18n

CERN-OHL-S v2 © 2026 Terry Wang
https://github.com/tengigabytes/MokyaLora

Sheet: /LORA/
File: LORA.kicad_sch

Title:

Size: A4	Date: 2026-03-22	Rev: A
KiCad E.D.A. 9.0.7		Id: 7/11

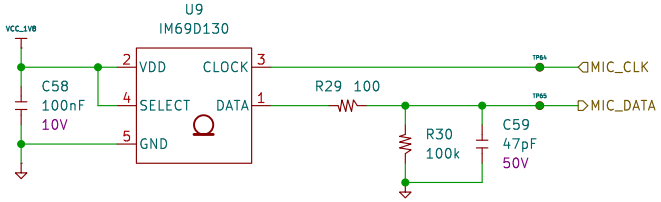

CERN-OHL-S v2 © 2026 Terry Wang
https://github.com/tengigabytes/MokyaLora

Sheet: /Microphone/
File: Microphone.kicad_sch

Title:

Size: A4	Date: 2026-03-22	**Rev: A**
KiCad E.D.A. 9.0.7		Id: 8/11

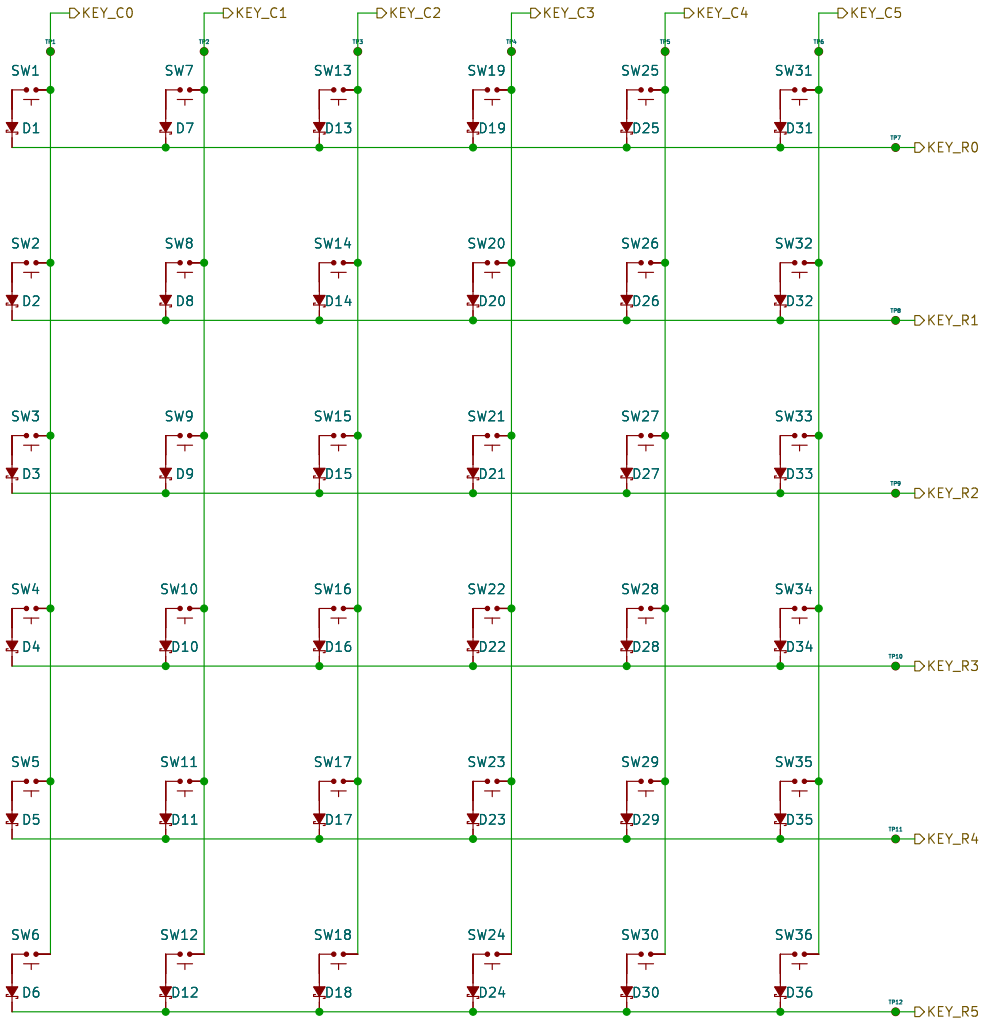

CERN-OHL-S v2 © 2026 Terry Wang
https://github.com/tengigabytes/MokyaLora

Sheet: /KeyBoard/
File: KeyBoard.kicad_sch

Title:

Size: A4	Date: 2026-03-22	**Rev: A**
KiCad E.D.A. 9.0.7		Id: 9/11

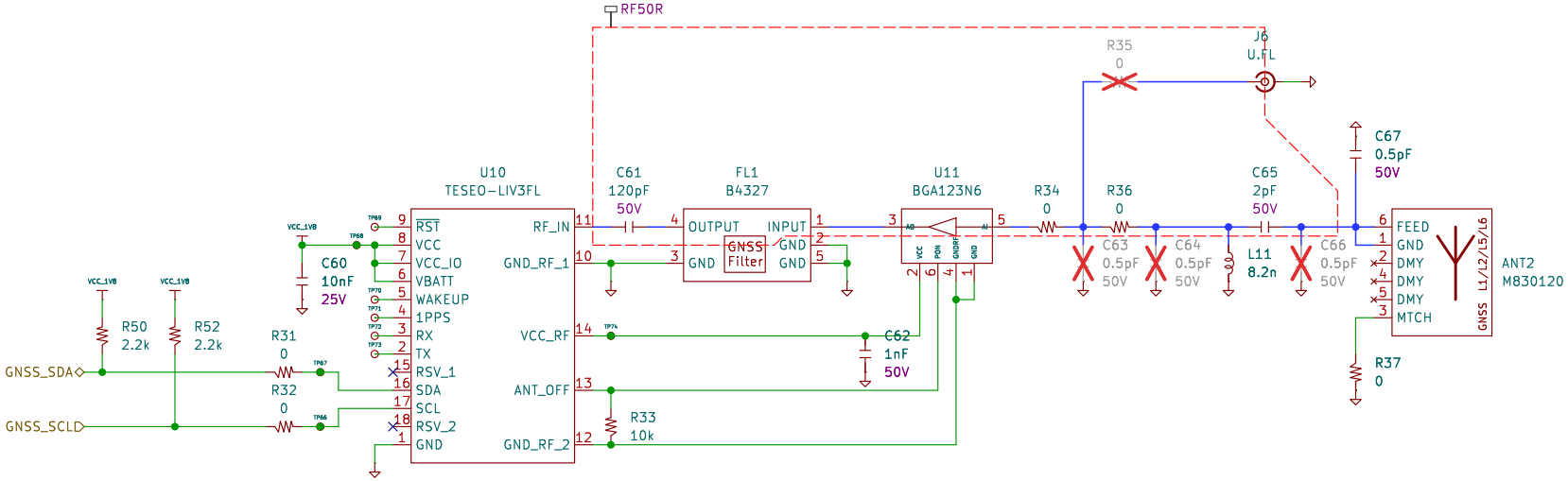

Spare MLCC:0.1pF, 0.2pF, 0.3pF, 0.5pF, 0.7pF, 1pF, 1.5pF, 2pF, 2.7pF, 3.3pF, 4.7pF,
Spare inductor: 3.3nH, 3.9nH, 5.6nH, 6.8nH, 8.2nH, 10nH, 12nH, 15nH, 18nH

CERN-OHL-S v2 © 2026 Terry Wang
https://github.com/tengigabytes/MokyaLora

Sheet: /GNSS/
File: GNSS.kicad_sch

Title:

Size: A4	Date: 2026-03-22	**Rev: A**
KiCad E.D.A. 9.0.7		Id: 10/11

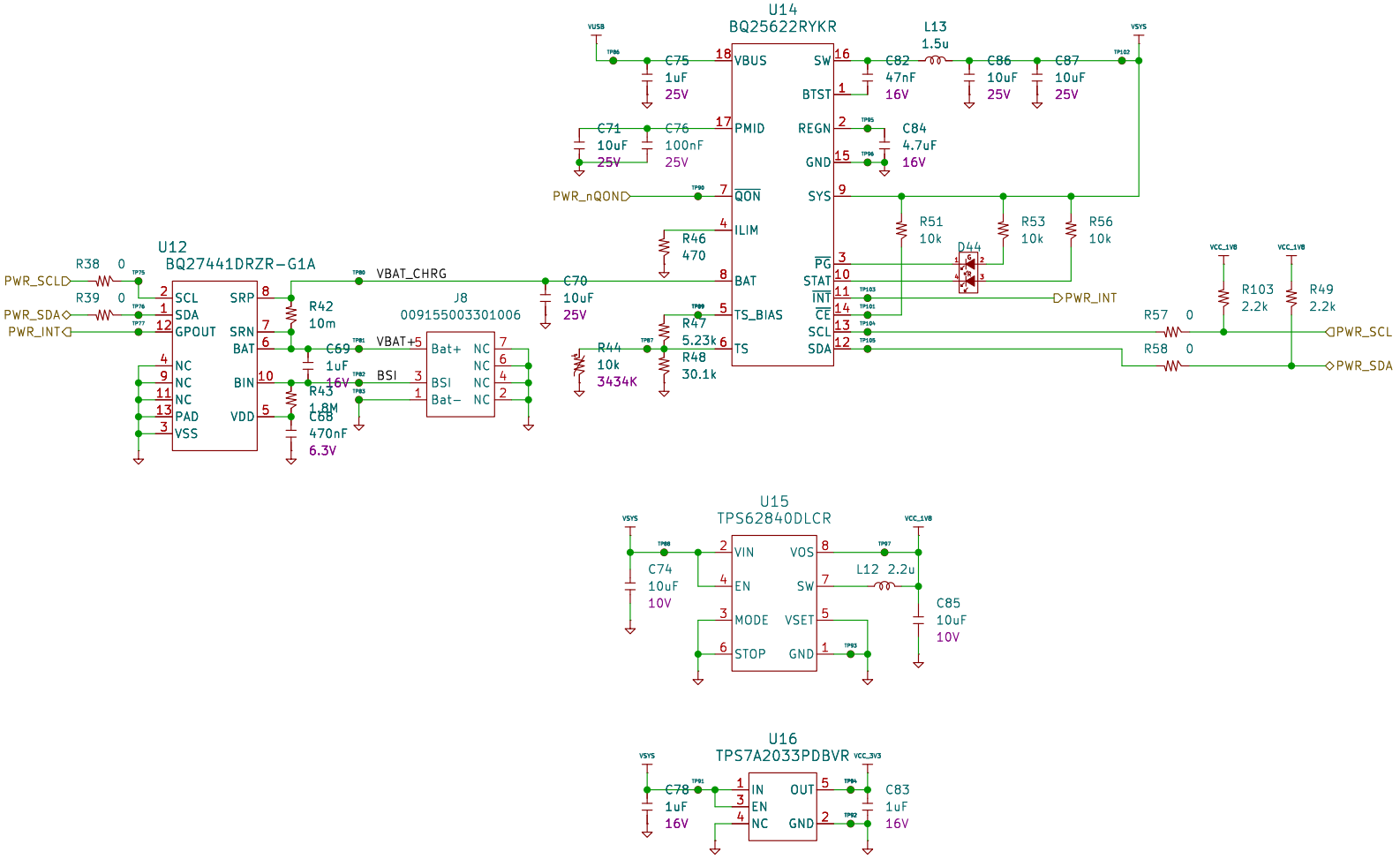

CERN-OHL-S v2 © 2026 Terry Wang
https://github.com/tengigabytes/MokyaLora

Sheet: /Power/
File: Power.kicad_sch

Title:

Size: A4	Date: 2026-03-22	**Rev: A**
KiCad E.D.A. 9.0.7		Id: 11/11

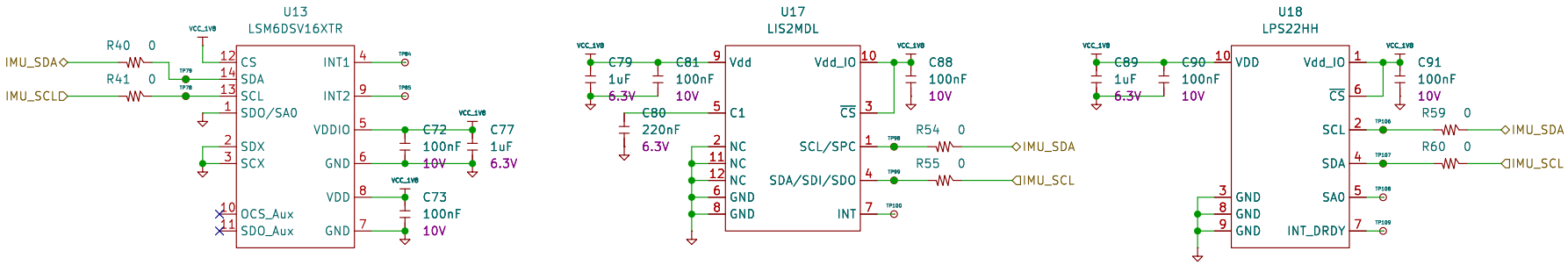

CERN-OHL-S v2 © 2026 Terry Wang
https://github.com/tengigabytes/MokyaLora

Sheet: /IMU/
File: IMU.kicad_sch

Title:

Size: A4	Date: 2026-03-22	**Rev: A**
KiCad E.D.A. 9.0.7		Id: 11/11

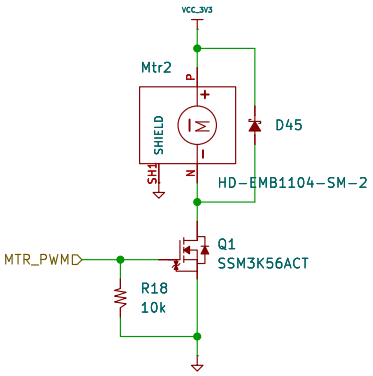

CERN-OHL-S v2 © 2026 Terry Wang
https://github.com/tengigabytes/MokyaLora

Sheet: /VibMotor/
File: VibMotor.kicad_sch

Title:

Size: A4	Date: 2026-03-22	**Rev: A**
KiCad E.D.A. 9.0.7		Id: 11/11