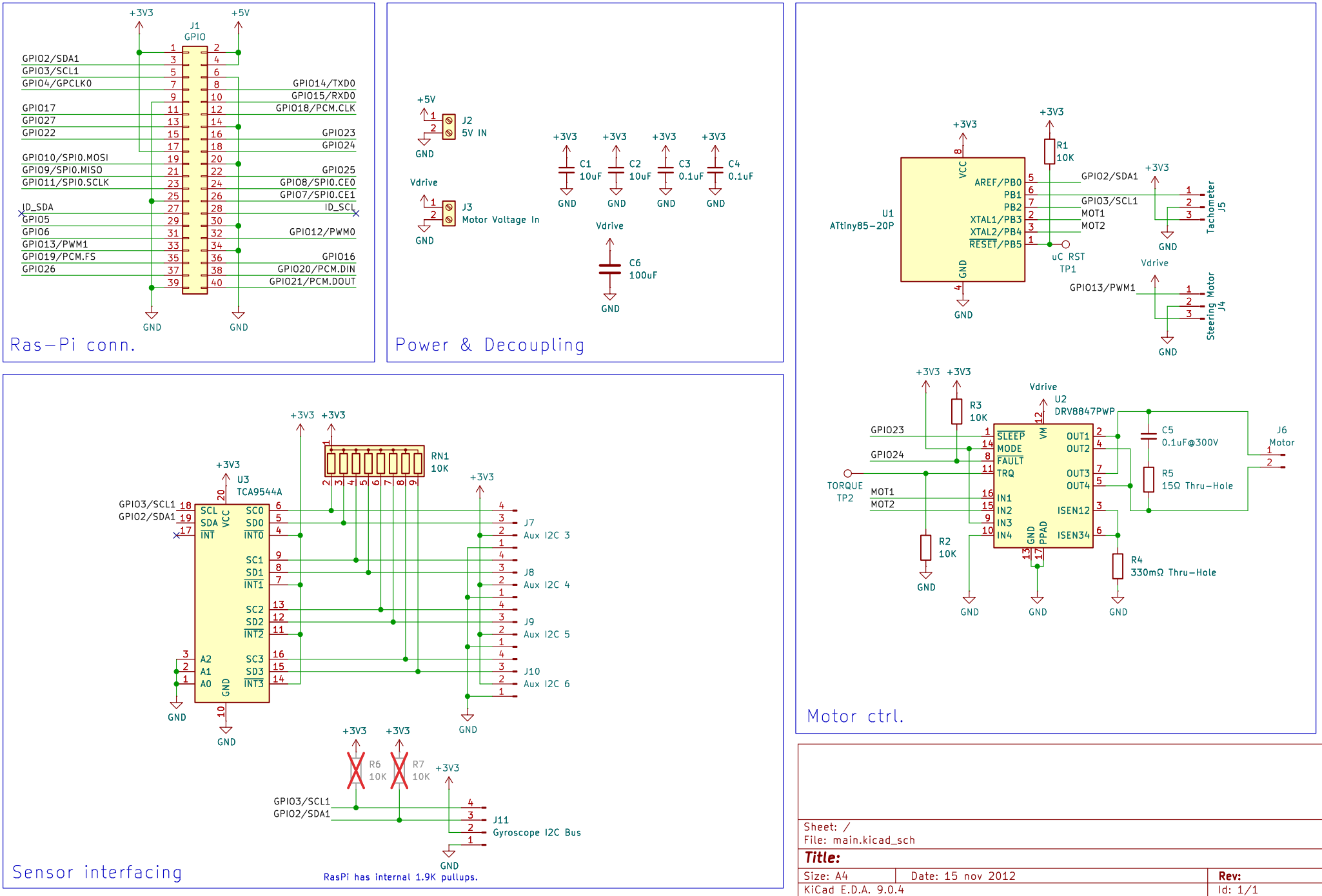
Ras-Pi conn.
J1
GPIO
+3V3
+5V
GPIO2/SDA1
GPIO3/SCL1
GPIO4/GPCLK0
GPIO17
GPIO27
GPIO22
GPIO10/SPI0.MOSI
GPIO9/SPI0.MISO
GPIO11/SPI0.SCLK
ID_SDA
GPIO5
GPIO6
GPIO13/PWM1
GPIO19/PCM.FS
GPIO26
GPIO14/TXD0
GPIO15/RXD0
GPIO18/PCM.CLK
GPIO23
GPIO24
GPIO25
GPIO8/SPI0.CE0
GPIO7/SPI0.CE1
ID_SCL
GPIO12/PWM0
GPIO16
GPIO20/PCM.DIN
GPIO21/PCM.DOUT
GND
Power & Decoupling
+5V
J2
5V IN
Vdrive
J3
Motor Voltage In
C1 10uF
C2 10uF
C3 0.1uF
C4 0.1uF
C6 100uF
Motor ctrl.
U1
ATtiny85-20P
VCC
AREF/PB0
PB1
PB2
XTAL1/PB3
XTAL2/PB4
RESET/PB5
R1 10K
uC RST
TP1
Tachometer
J5
Steering Motor
J4
U2
DRV8847PWP
SLEEP
MODE
FAULT
TRQ
IN1
IN2
IN3
IN4
OUT1
OUT2
OUT3
OUT4
ISEN12
ISEN34
VM
PPAD
R3 10K
R2 10K
C5 0.1uF@300V
R5 15Ω Thru-Hole
R4 330mΩ Thru-Hole
J6
Motor
TORQUE
TP2
Sensor interfacing
U3
TCA9544A
SCL
SDA
INT
SC0
SD0
INT0
SC1
SD1
INT1
SC2
SD2
INT2
SC3
SD3
INT3
A2
A1
A0
RN1 10K
J7
Aux I2C 3
J8
Aux I2C 4
J9
Aux I2C 5
J10
Aux I2C 6
R6 10K
R7 10K
J11
Gyroscope I2C Bus
RasPi has internal 1.9K pullups.
Sheet: /
File: main.kicad_sch
Title:
Size: A4
Date: 15 nov 2012
Rev:
KiCad E.D.A. 9.0.4
Id: 1/1