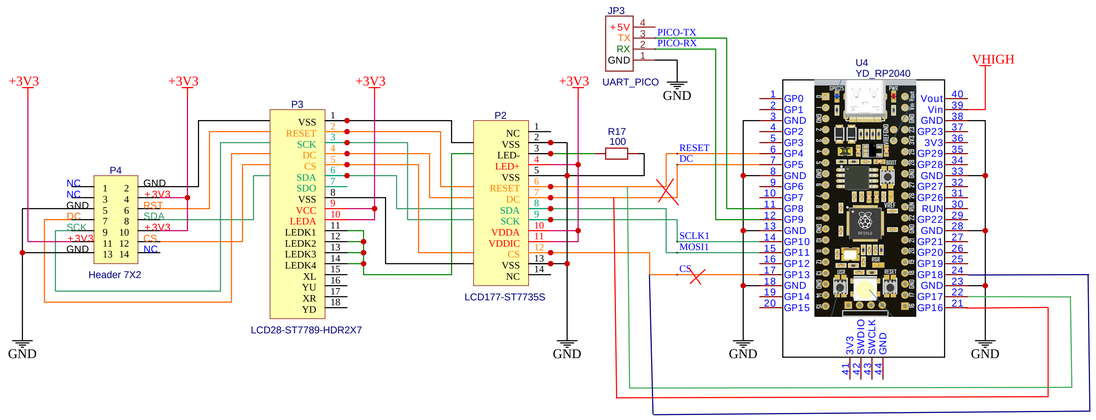

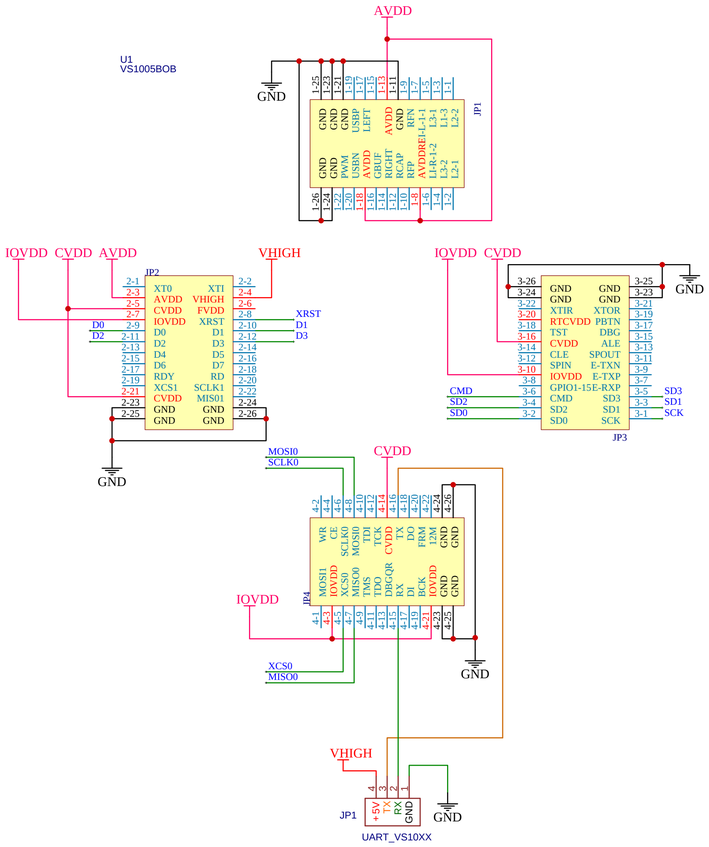

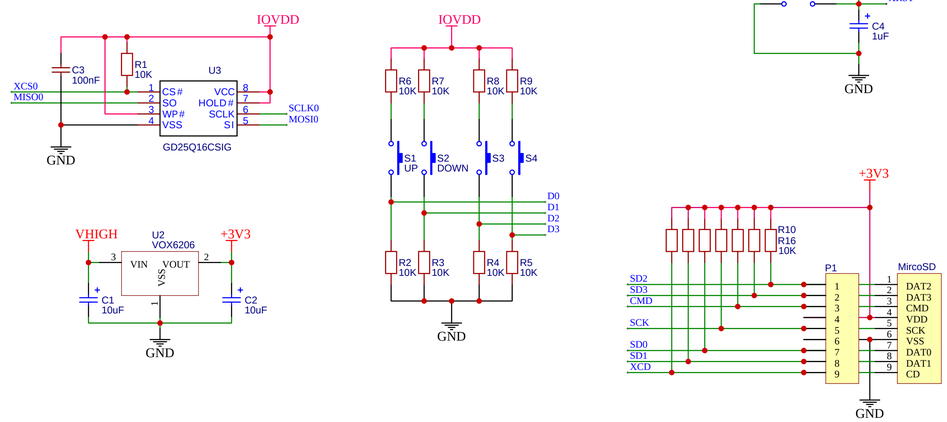

TITLE: Sheet_1		REV: 1.0
嘉立创EDA	Company: Your Company	Sheet: 1/1
	Date: 2024-01-30 Drawn By: kmok163	

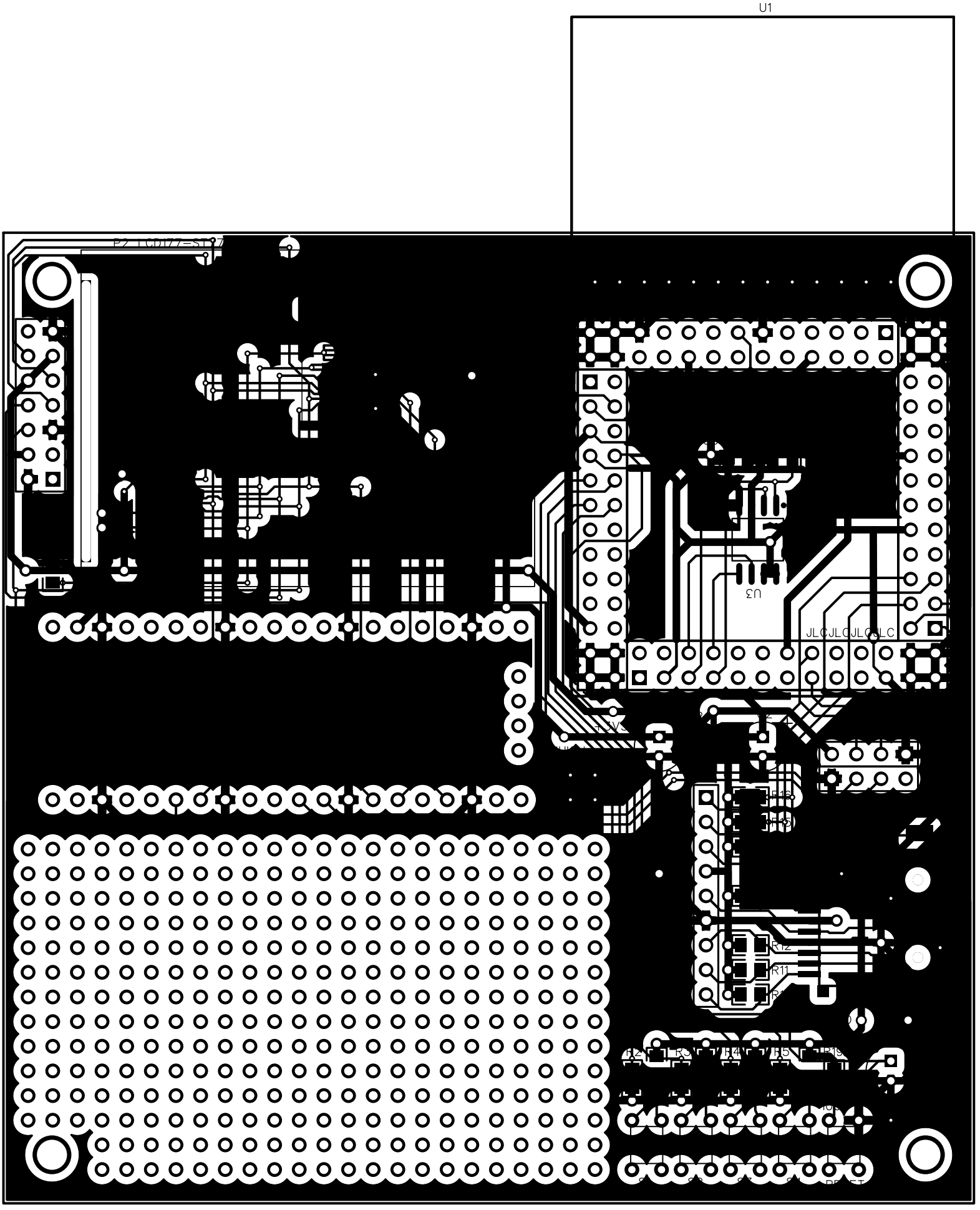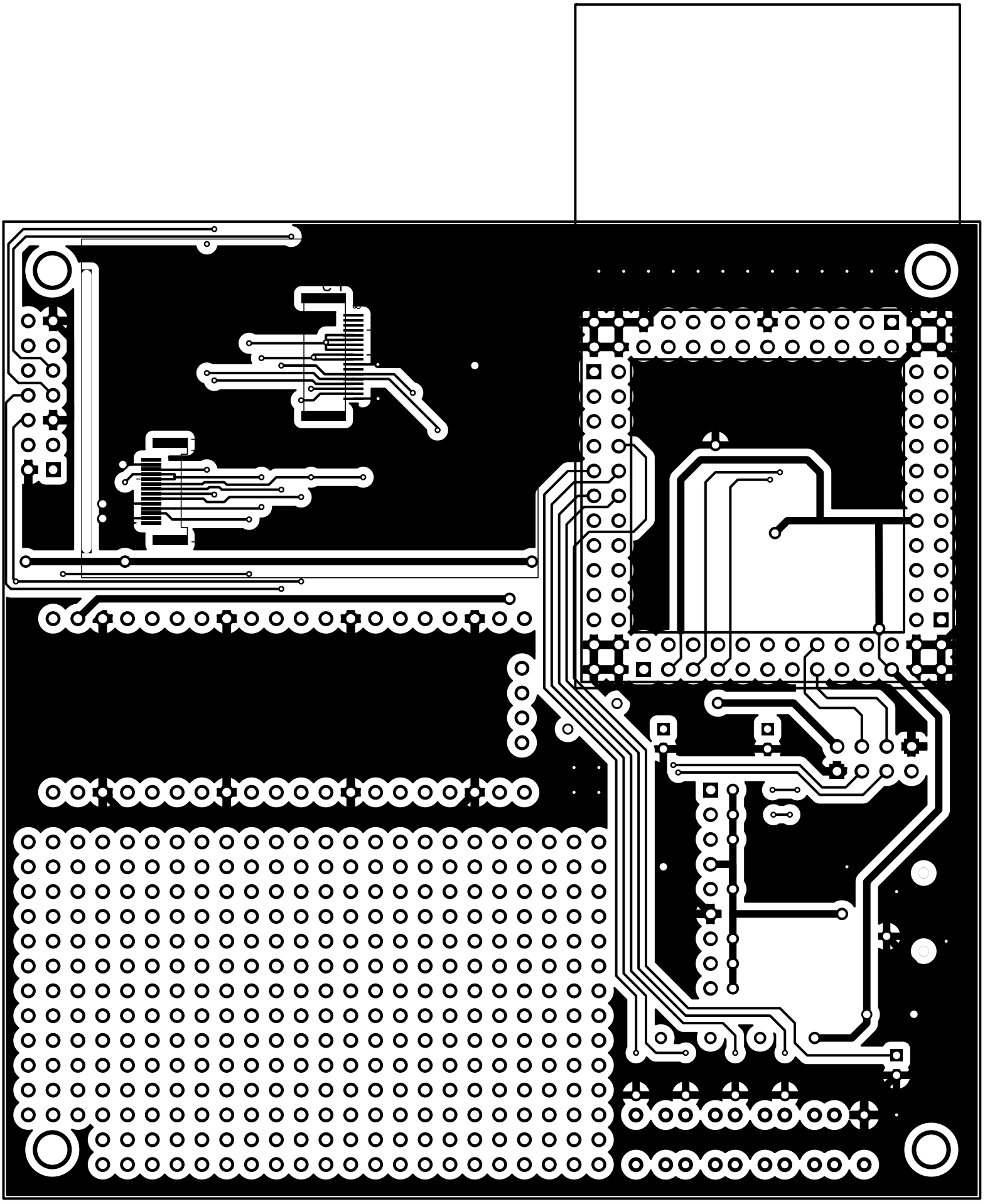
U1
U3
JLCJLCJLCJLC
R12
R11