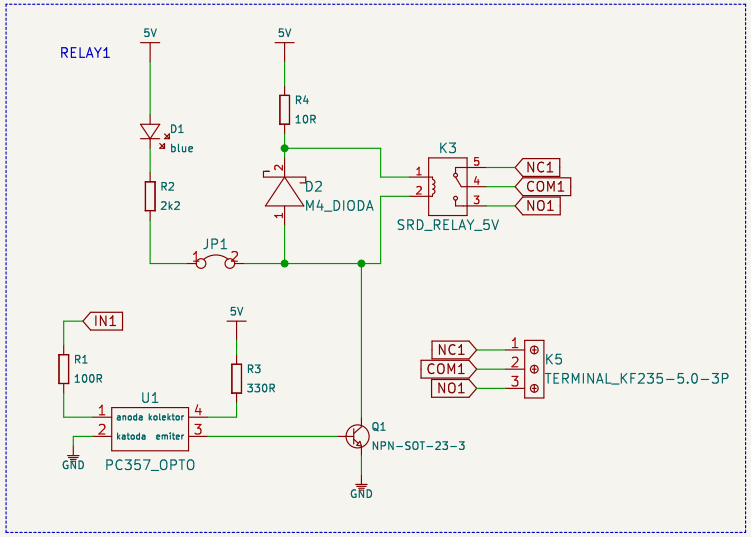

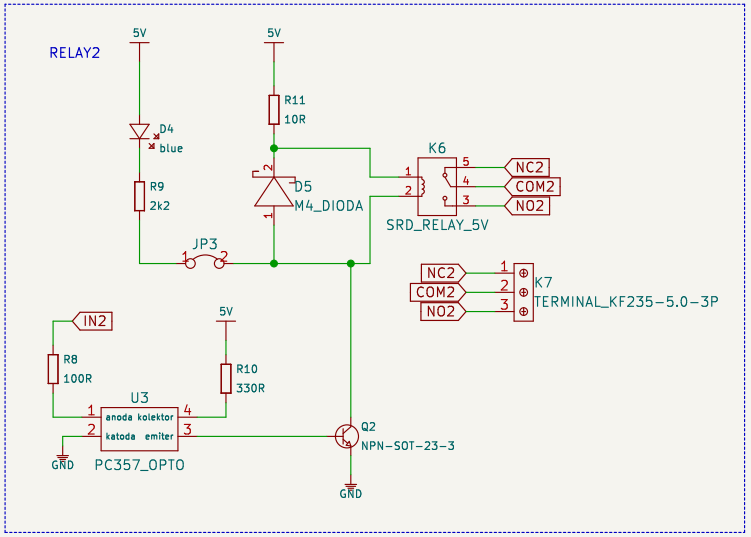

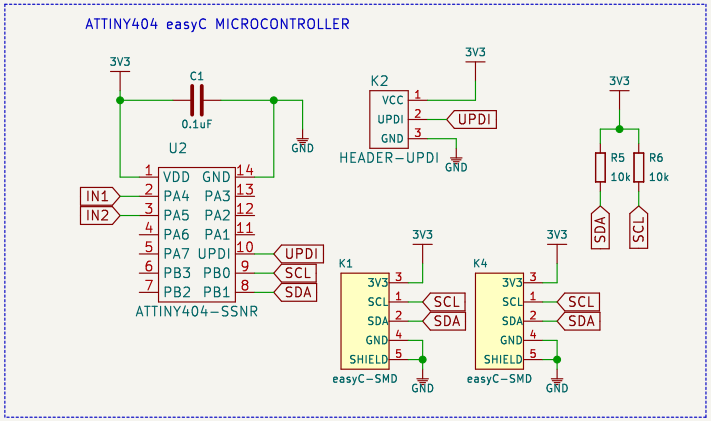

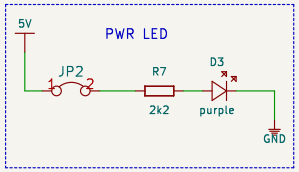

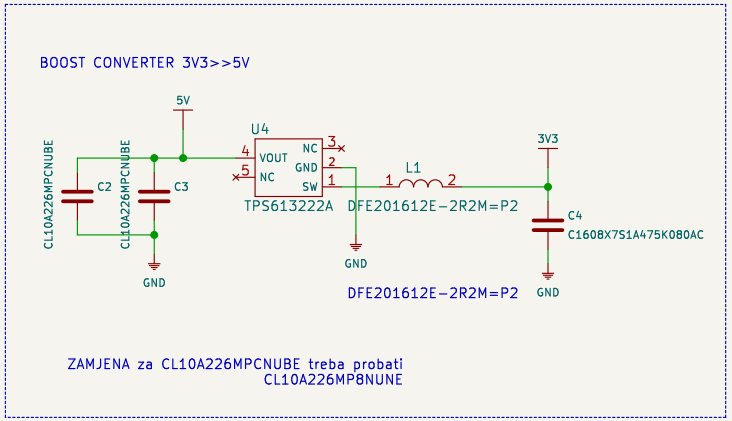

FD1 FIDUCIAL
FD2 FIDUCIAL
H1 HOLE_3.2mm
H2 HOLE_3.2mm
H3 HOLE_3.2mm
H4 HOLE_3.2mm

Need help? support.soldered.com | Store: soldered.com | Custom PCBs: pcb.soldered.com | Learn: blog.soldered.com

2CH relay board with easyC

Soldered

Version: V1.1.1.	Date: 2021-07-14	Sheet: 1/1	www.solde.red/333025