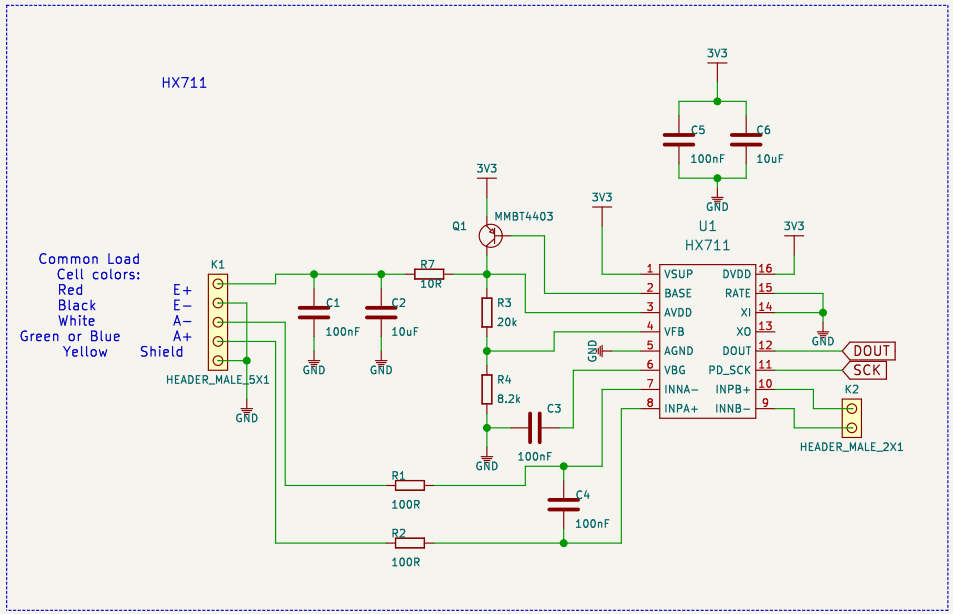


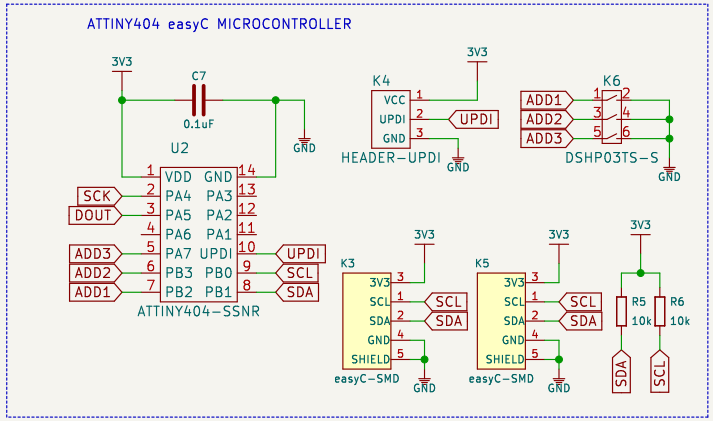


FD1 FIDUCIAL

H1 HOLE_3.2mm

H2 HOLE_3.2mm

Need help? support.soldered.com | Store: soldered.com | Custom PCBs: pcb.soldered.com | Learn: blog.soldered.com

# HX711 breakout easyC

Soldered

| Version: V1.1.1. | Date: 2021−06−30 | Sheet: 1/1 | www.solde.red/333006 |
|---|---|---|---|