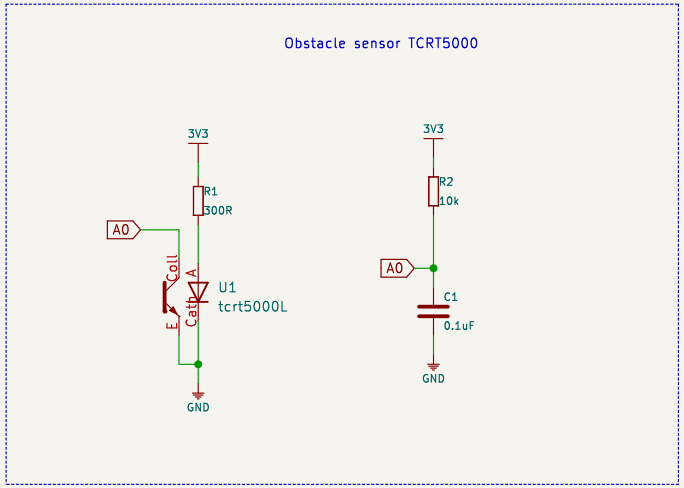

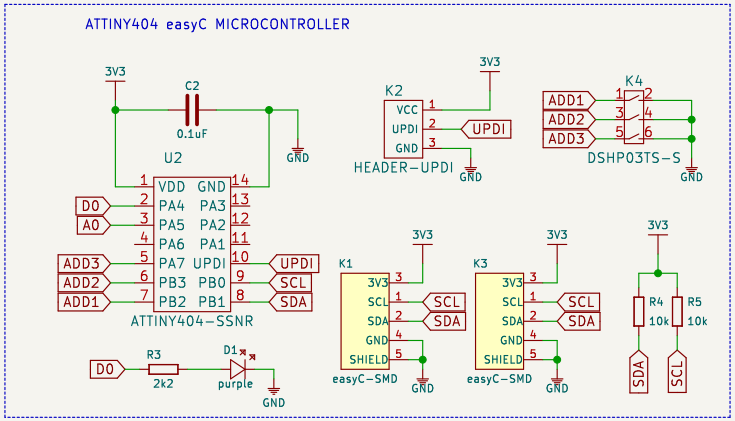

FD1
FIDUCIAL

H1
HOLE_3.2mm

H2
HOLE_3.2mm

Need help? support.soldered.com | Store: soldered.com | Custom PCBs: pcb.soldered.com | Learn: blog.soldered.com

Obstacle sensor with easyC

Soldered

Version: V1.1.1.	Date: 2021-07-01	Sheet: 1/1	www.solde.red/333004