Notes (unless otherwise specified):
1. This drawing is construed as information only, it is complete only to the degree necessary to illustrate a system definition for assembly

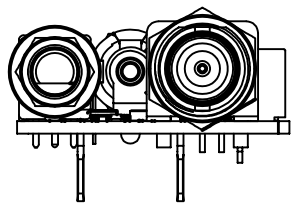

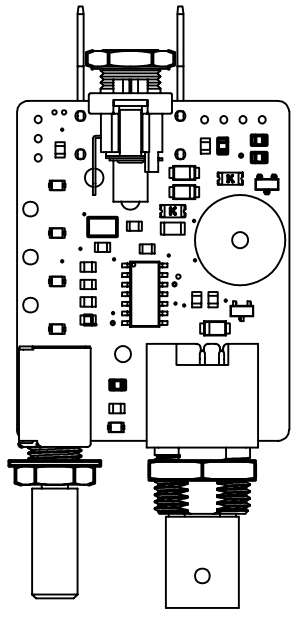

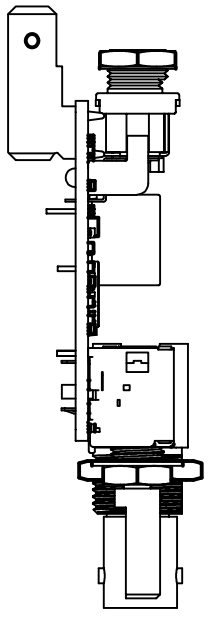

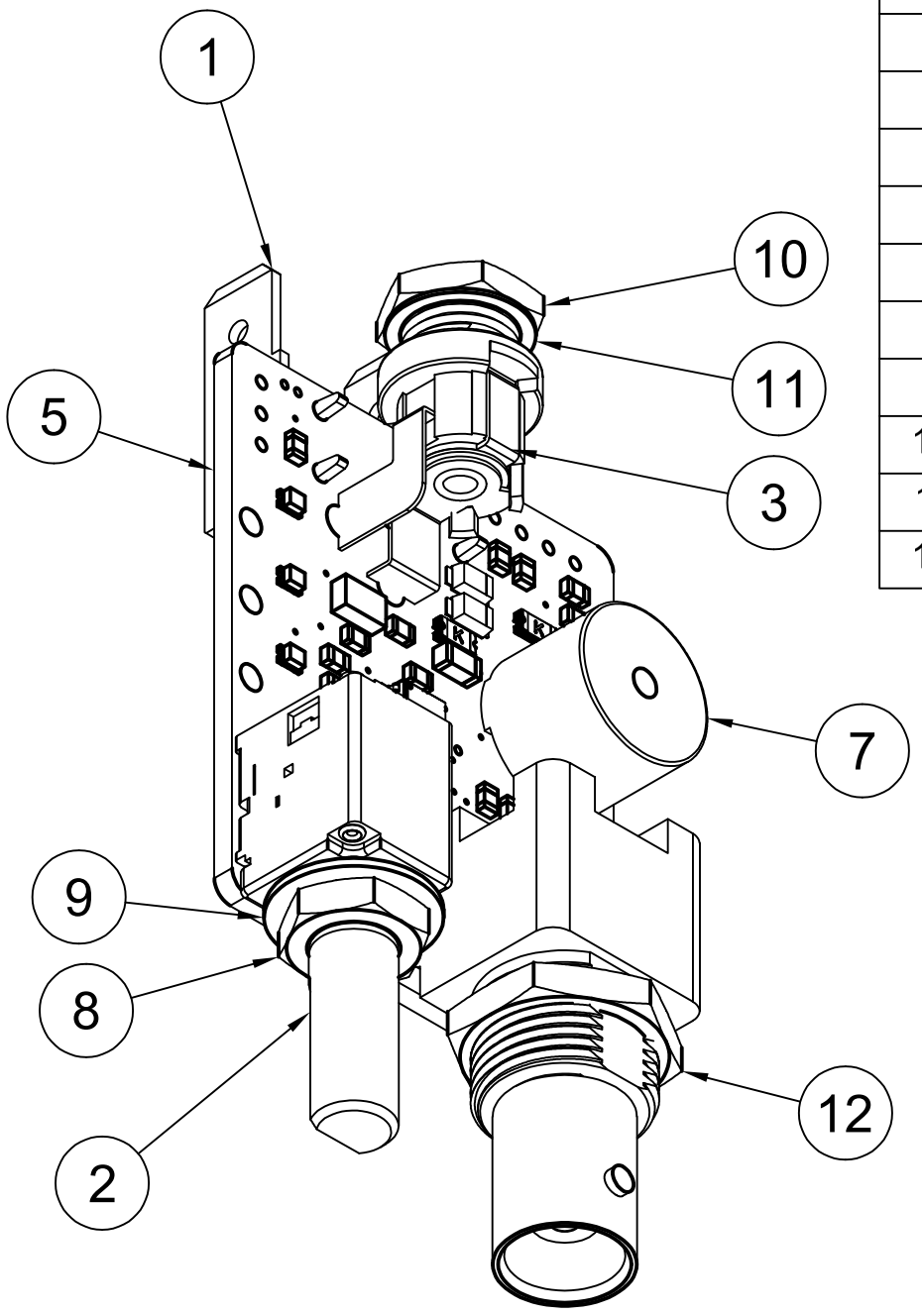

Parts List

Item	Qty	Part Number
1	2	M-TEC-1217754-1
2	1	M-TTE-P091S-FC20BR10K
3	1	M-CUI-PJ-066A
4	1	M-TE-5227161-9
5	1	Papra v0.5
6	2	M-Littelfuse-1206L150THWR
7	1	M-CUI-CMI-1295-1285T
8	1	M-TTE-34-1032-2A
9	1	M-TTE-P091S
10	1	M-CUI-PJ-005X-HDW
11	1	M-CUI-PJ-005X-HDW
12	1	M-TE-1-1634816

Copyright Notice:
This drawing is open hardware: you can redistribute it and/or modify it under the terms of the CERN OPEN HARDWARE LICENSE VER 2 - PERMISSIVE
See ohwr.org/cern_ohl_p_v2.pdf

UNITS: MM

TOLERANCES:
x ± 0.5
.x ± 0.2
.xx ± 0.1
Angles ± 0.5°

1st ANGLE PROJECTION

TETRA BIO DISTRIBUTED

WWW.TETRABIODISTRIBUTED.ORG

APPROVED

APPROVED DATE

CHECKED

DRAWN

PROJECT
Tetra PAPR

TITLE

SIZE	DATE	PART NO	REV
A3			

DO NOT SCALE | MATERIAL: | SHEET 1/1