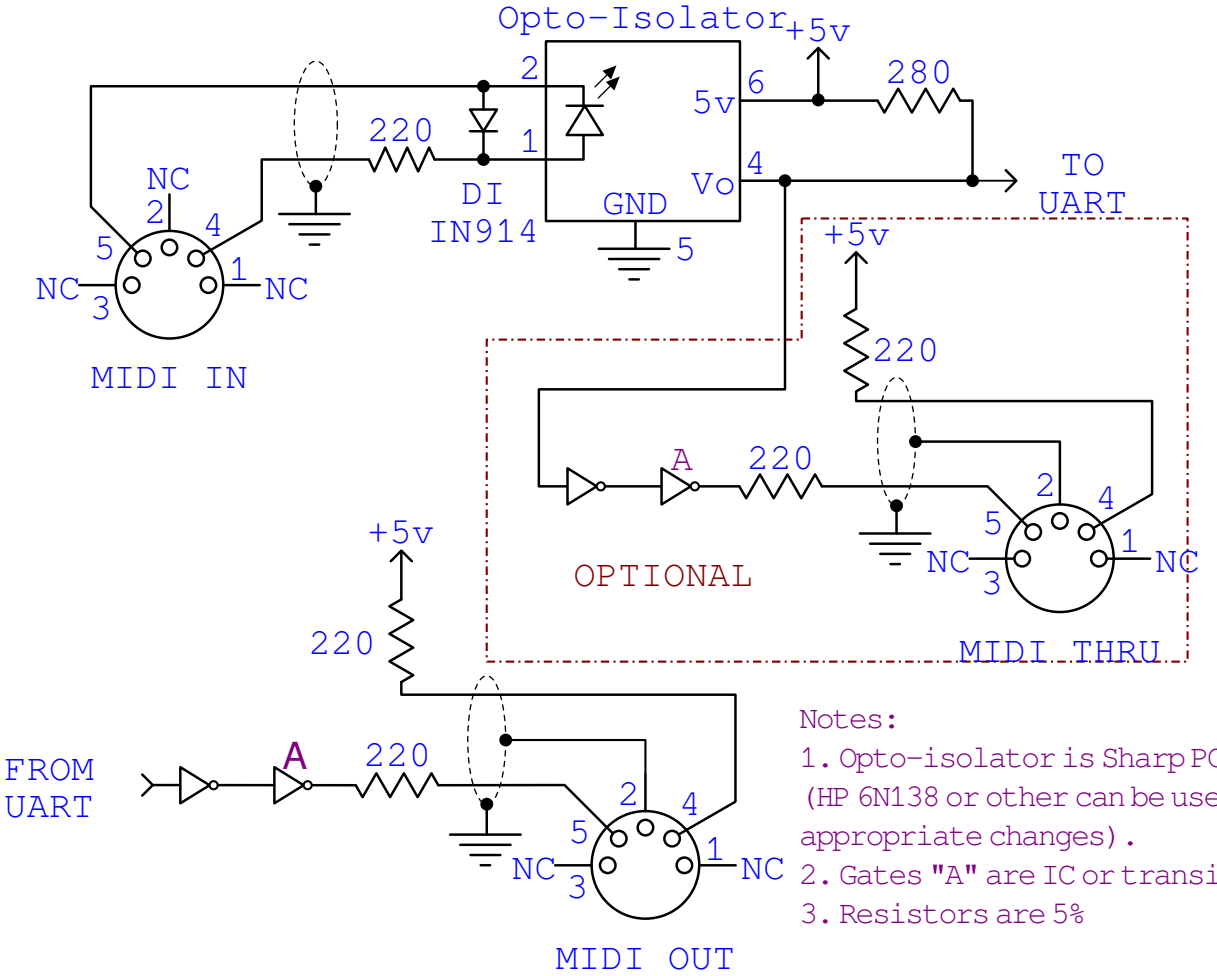

Notes:

1. Opto-isolator is Sharp PC-900. (HP 6N138 or other can be used with appropriate changes).
2. Gates "A" are IC or transistor
3. Resistors are 5%