EENG4640 Midterm Presentation

Project Glass House

Team No. 8

Tamera Gilmore

Jack Jones

Bryan Bosely

Cole Freeman

Project Introduction

- This project develops a network of wireless sensing nodes capable of detecting human presence in collapsed structures following disasters such as tornadoes or earthquakes
- The system uses radio frequency (RF) signals to detect disturbances in these signals caused by the human body, even when victims are hidden beneath debris or rubble

GEORGIA SOUTHERN UNIVERSITY

Project Introduction

Key system characteristics:

- Network of ESP32 wireless sensing nodes
- Nodes measure Channel State Information (CSI) from Wi-Fi signals
- Human bodies are known to alter RF propagation through absorption, reflection, and multipath effects
- Machine learning algorithms analyze CSI patterns to detect human presence
- System provides non-invasive and low-cost victim detection method

GEORGIA SOUTHERN UNIVERSITY

Motivation - Disaster SAR

After severe disasters such as tornadoes and earthquakes:

- Building may collapse into dense debris fields
- Victims may be trapped under rubble and difficult to locate
- Visibility may be extremely limited

Disaster Scenario

GEORGIA SOUTHERN UNIVERSITY

Motivation - Disaster SAR

Traditional Urban Search and Rescue (US&R) methods rely on

- Rescue dogs
- Rescue Radar

Limitations of current methods:

- Dogs require extensive training and rest periods
- Price points for both are high

GEORGIA SOUTHERN UNIVERSITY

Motivation - Disaster SAR

RF sensing offers the potential to:

- Detect victims without direct visibility
- Penetrate non-metal debris such as wood, drywall, and insulation
- Provide rapid area scanning
- Use low-cost and portable hardware

This system aims to provide a supplementary tool for first responders to help locate trapped survivors more quickly

GEORGIA SOUTHERN UNIVERSITY

Background - Current US&R

- Canine search teams play a critical role in structural collapse incidents
- Locate victim quickly using scent
- Investment approximately $25,000-$60,000 to train/vet/pair a search dog with a handler

Search Dog Foundation Photo with SDF-trained team

GEORGIA SOUTHERN UNIVERSITY

Background - Current US&R

- Rescue Radar by Aerica Engineering
- Uses 500MHz
- Advertised for Natural Disaster, Terrorist Attack, Mining disaster, Structural Collapse
- Cost approximately $48,000 dollars per unit

Rescue Radar]

GEORGIA SOUTHERN UNIVERSITY

Background - RF Sensing for Human Detection

The human body significantly affects radio signals because it:

- absorbs RF energy
- reflects signals
- alters multipath propagation

These effects change measurable signal parameters

GEORGIA SOUTHERN UNIVERSITY

Background - RF-Based Research

Research has demonstrated that wireless signals can detect:

- human motion and position
- breathing patterns
- presence behind walls

This project extends those concepts to disaster rescue scenarios involving collapsed structures

GEORGIA SOUTHERN UNIVERSITY

Background - CSI and RSSI

From Channel State Information (CSI) data, detailed measurements of the wireless channel can be derived that are useful for localization:

- amplitude of each subcarrier
- phase information
- multipath channel characteristics

Received Signal Strength Indicator (RSSI) is a decibel number that describes signal strength:

- Can easily be used to detect if a human is present as a binary characteristic

GEORGIA SOUTHERN UNIVERSITY

Software Block Diagram-ESP32s

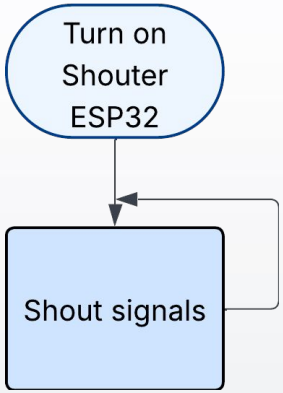

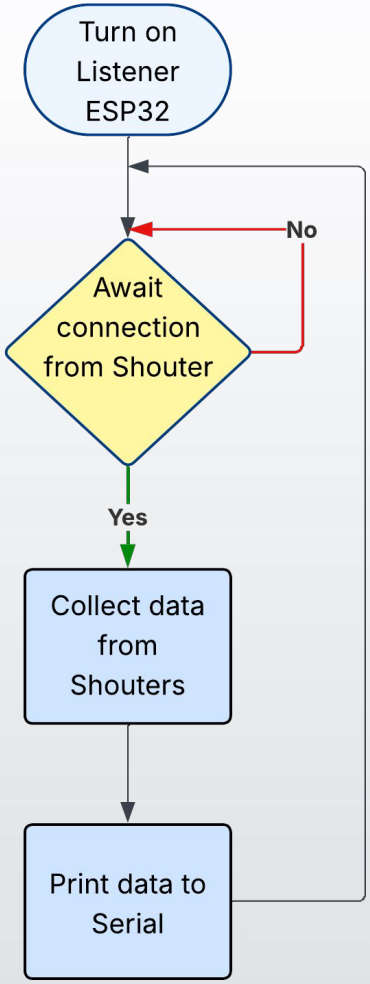

GEORGIA SOUTHERN UNIVERSITY

Software Block Diagram-Data Collection

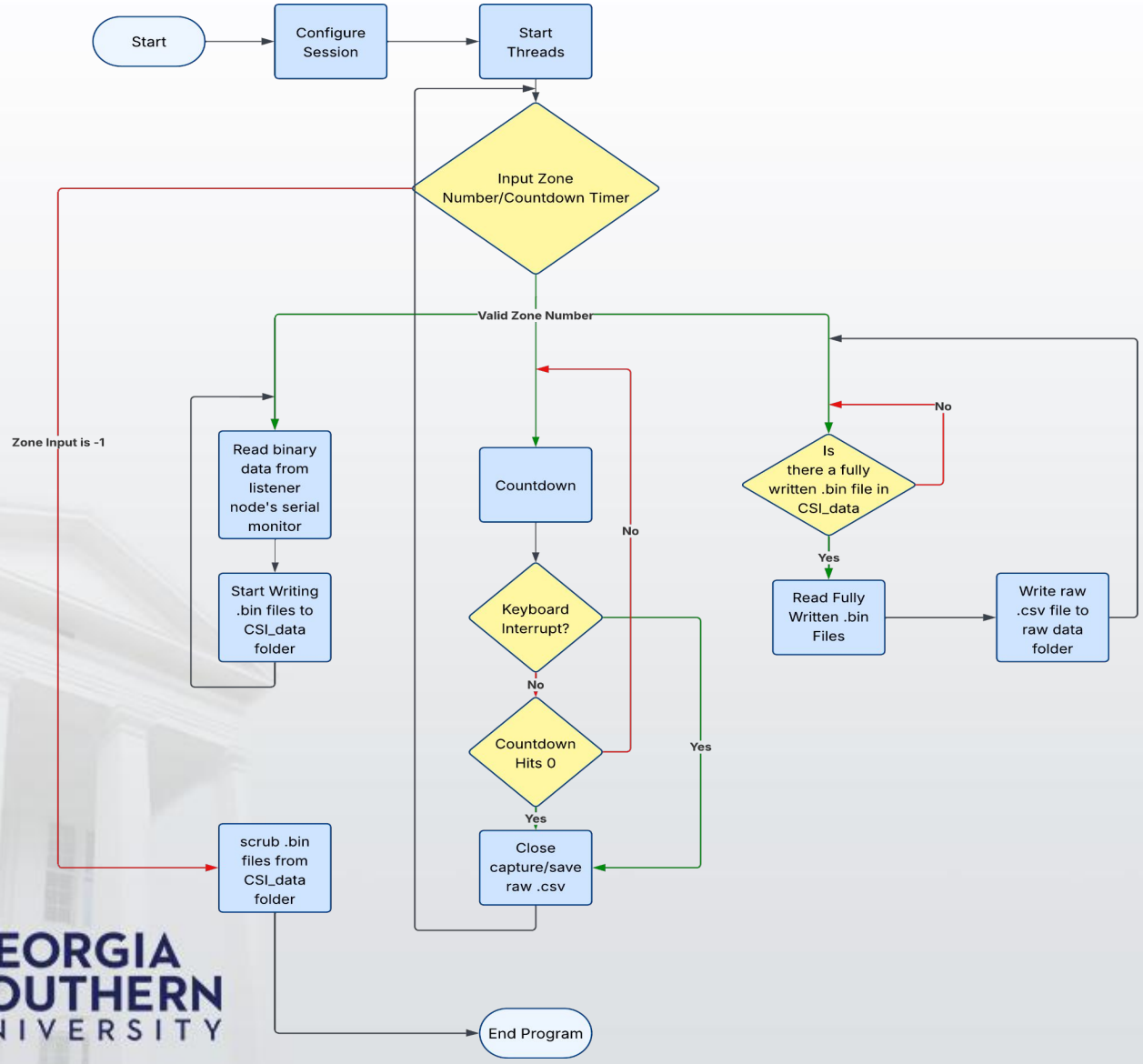

GEORGIA SOUTHERN UNIVERSITY

Software Block Diagram-PI

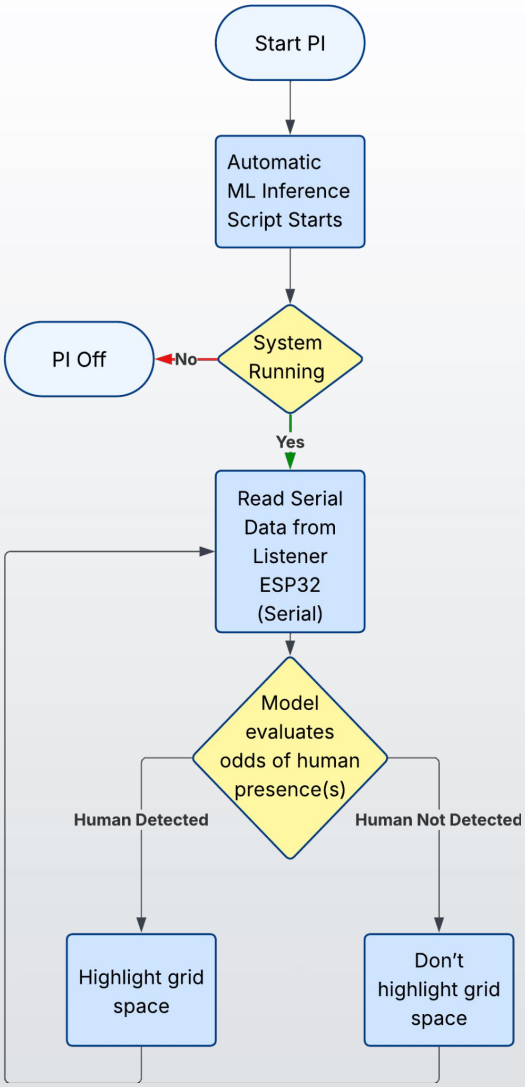

GEORGIA SOUTHERN UNIVERSITY

Hardware Block Diagrams - Shouter

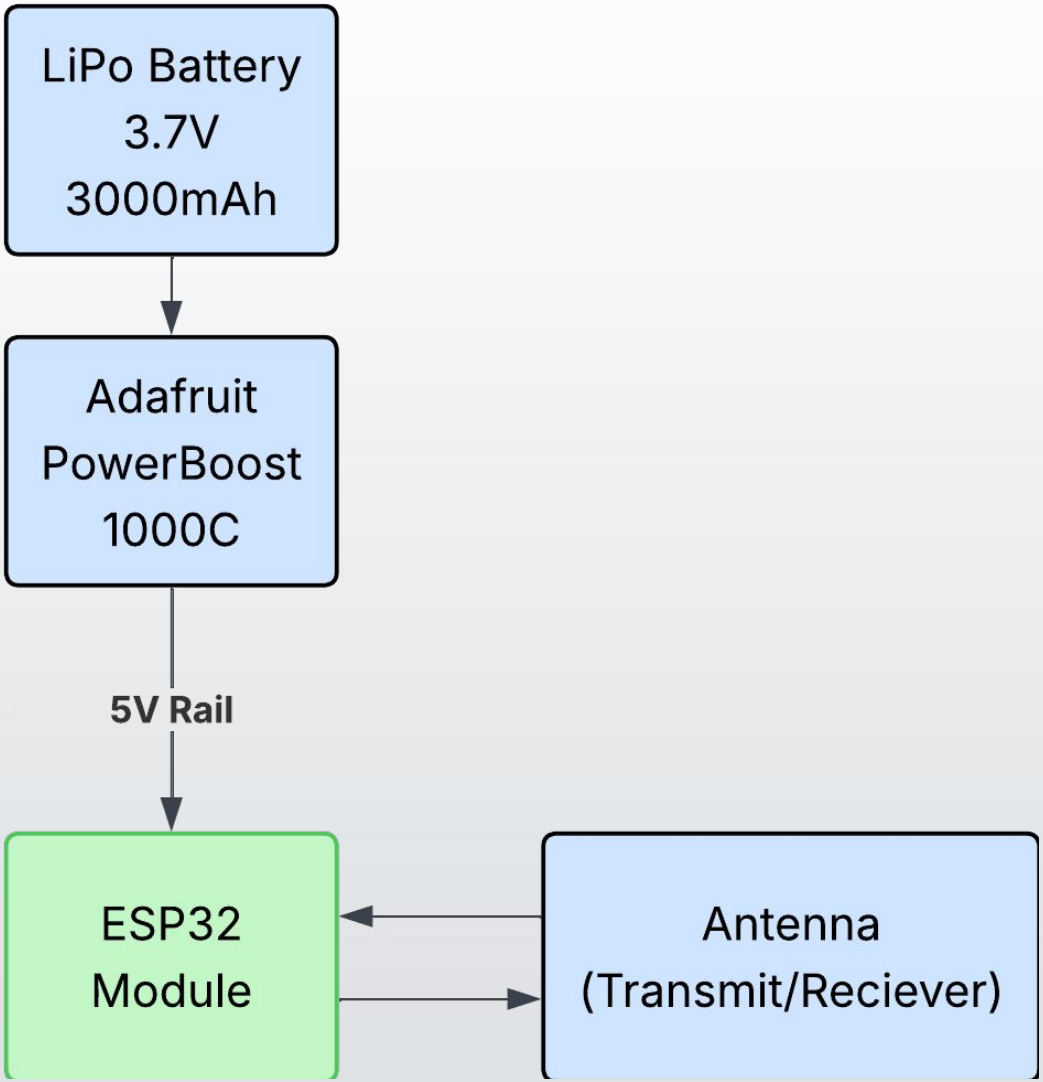

GEORGIA SOUTHERN UNIVERSITY

Hardware Block Diagrams - Central Device

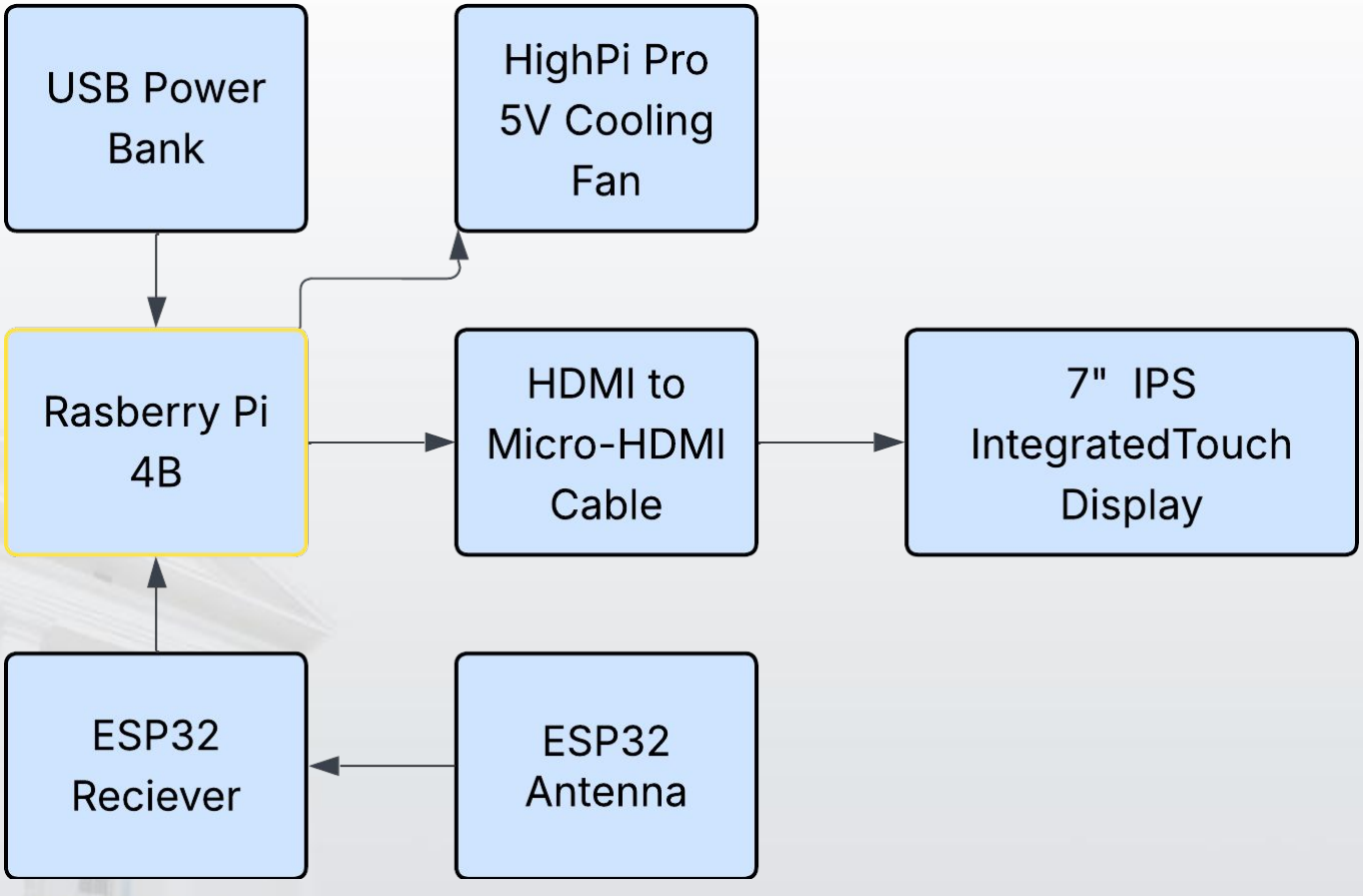

GEORGIA SOUTHERN UNIVERSITY

System Flow Diagram

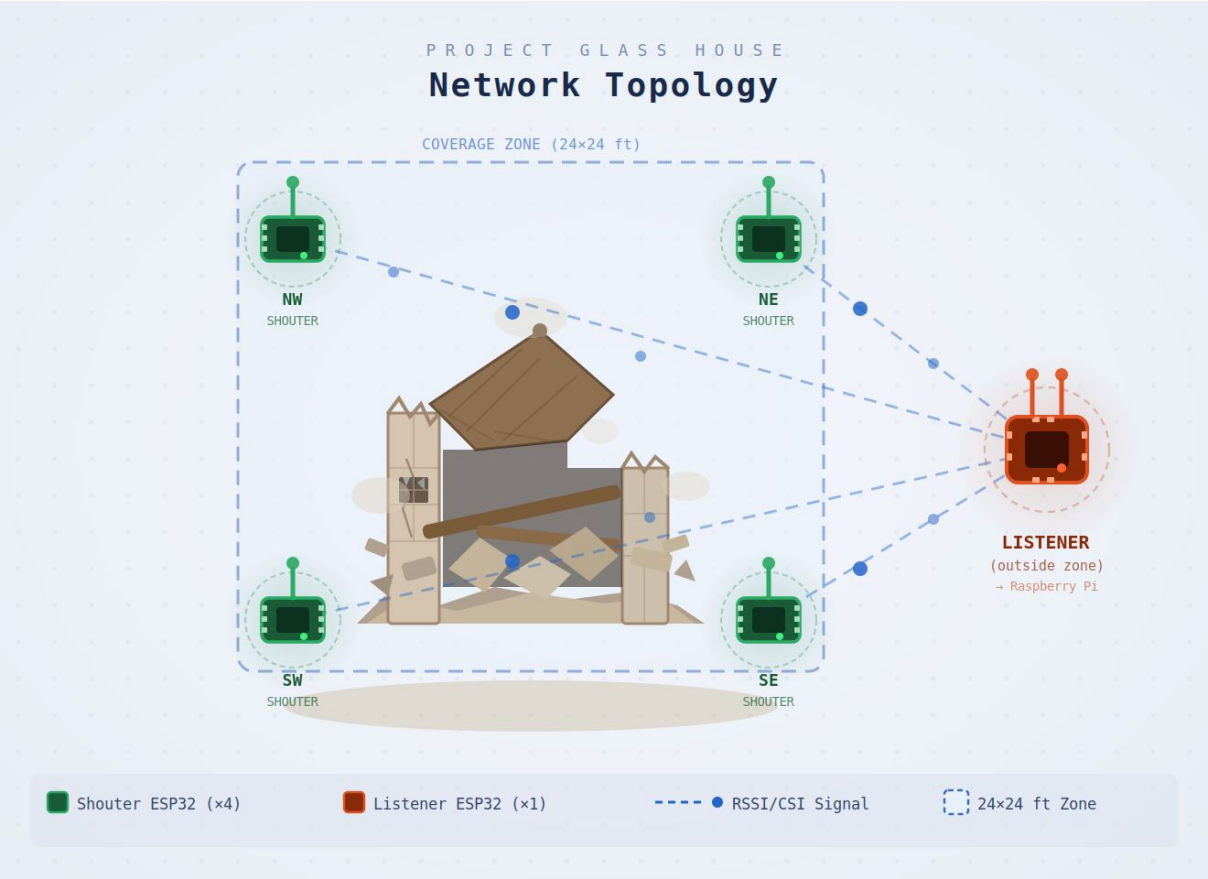

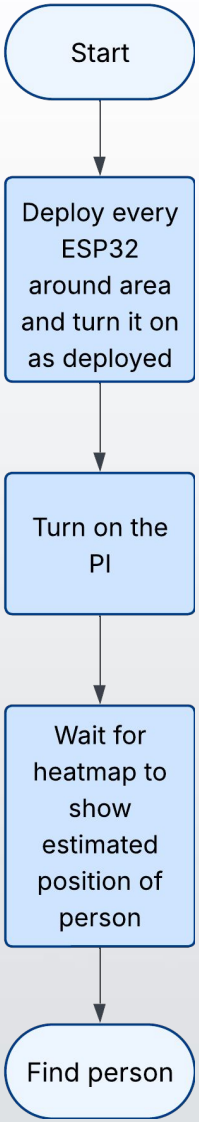

GEORGIA SOUTHERN UNIVERSITY

Project Schedule/Gantt Chart

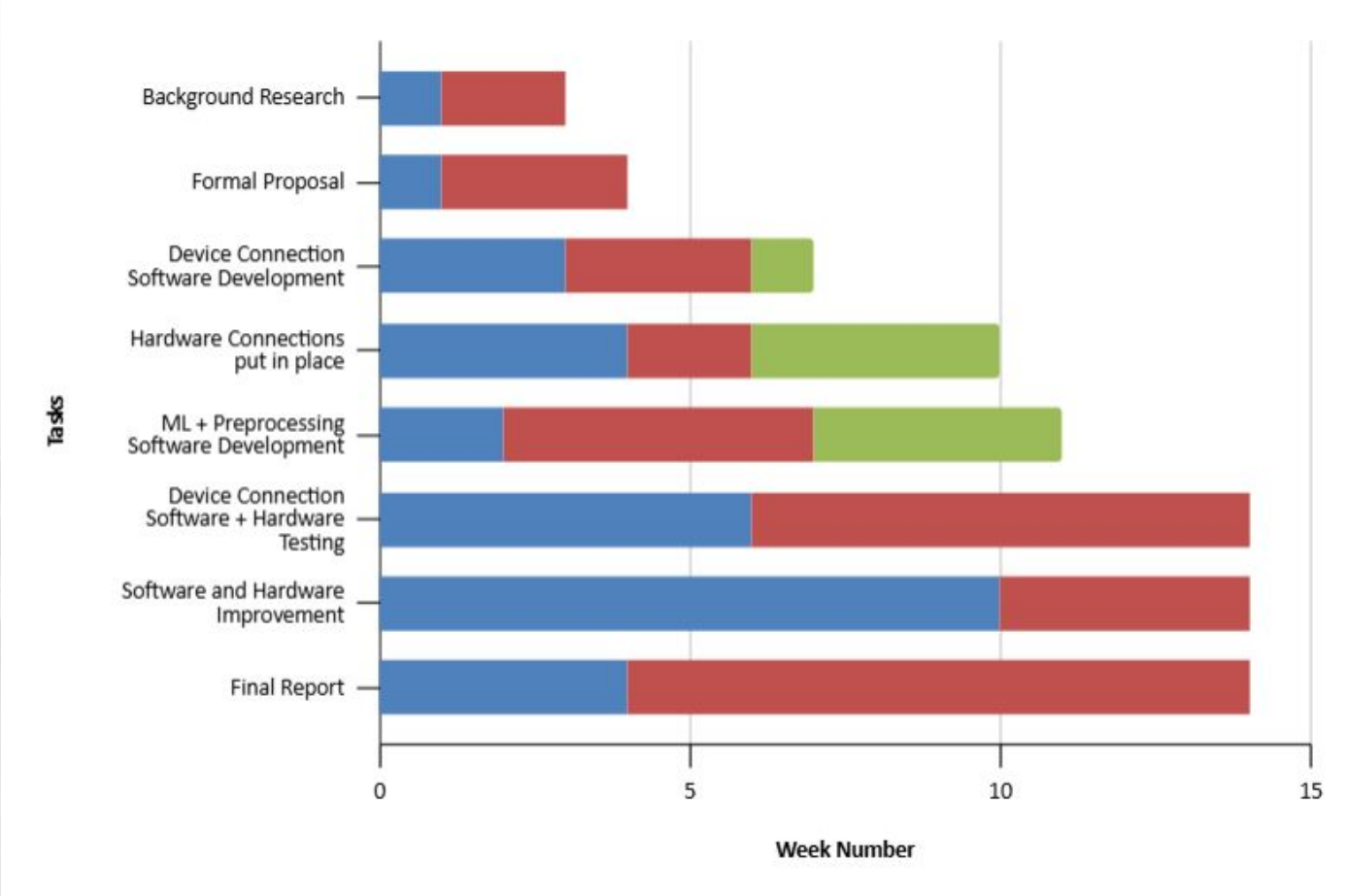

GEORGIA SOUTHERN UNIVERSITY

Project Main Challenges

- Choosing the best frequency
- Legality / Ethical Concerns/ Privacy
- Accurate Enclosures
- ESP Communication
- Multithreading
- Testing/Timing
- Machine Learning

GEORGIA SOUTHERN UNIVERSITY

Project Goals

- Detect human presence with 85% accuracy
- Quick deployment time
- Low cost SAR solution
- Portable System
- Ease of user access

GEORGIA SOUTHERN UNIVERSITY

Project Implementation - Losses

- Free Space Path Loss
- Attenuation
- Noise
- Multipath Propagation
- Weather
- Obstacles
- Movement
- Ionospheric Disturbances

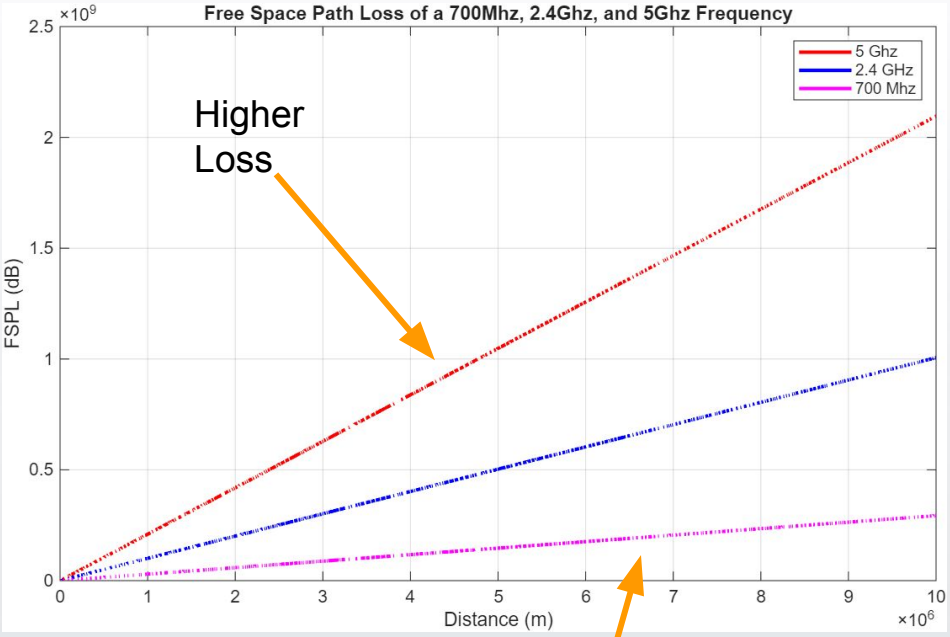

Worse for CSI

GEORGIA SOUTHERN UNIVERSITY

Project Implementation - Software Implementation

Firmware on ESP32s and data collection scripts:

- Using a listener receives signals from multiple shouters:
  - Binary data will be transferred to our central device via serial monitor from USB connection
- CSI and RSSI data collection from Wi-Fi packets
  - From this we can derive: Signal-to-Noise Ratio (SNR), amplitude, phase…

ML model development using spatial heat-mapping

GEORGIA SOUTHERN UNIVERSITY

Project Implementation - Hardware

The sensing nodes are built using the following components:

- ESP32-DevKitC-32UE microcontroller
- External LTE antenna for improved RF propagation
- 5V Rail including capacitors for filtering noise and handling current spike during transmissions

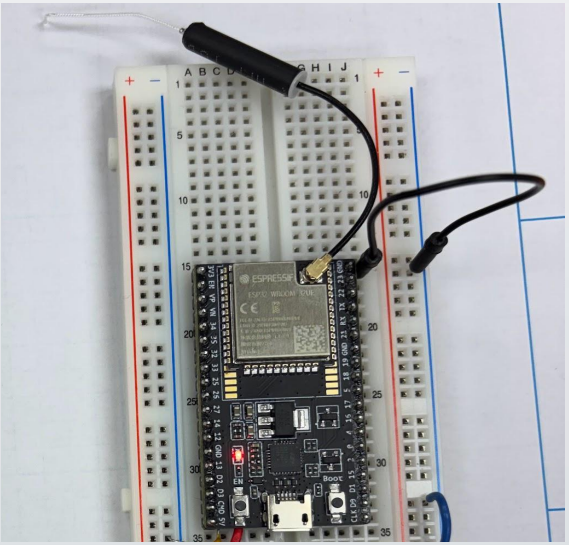

GEORGIA SOUTHERN UNIVERSITY

Current Shouter Node Design

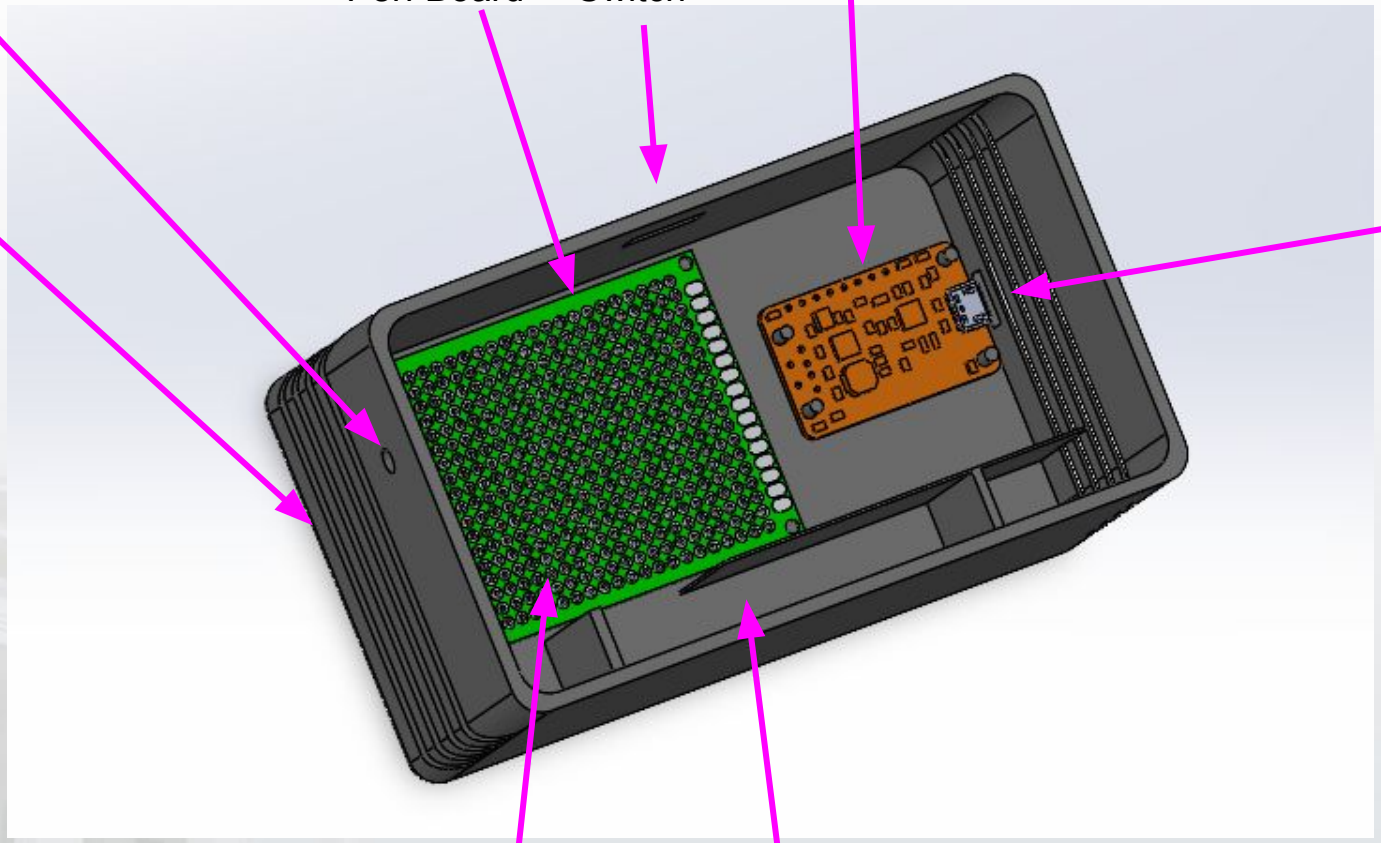

GEORGIA SOUTHERN UNIVERSITY

Current Node Design

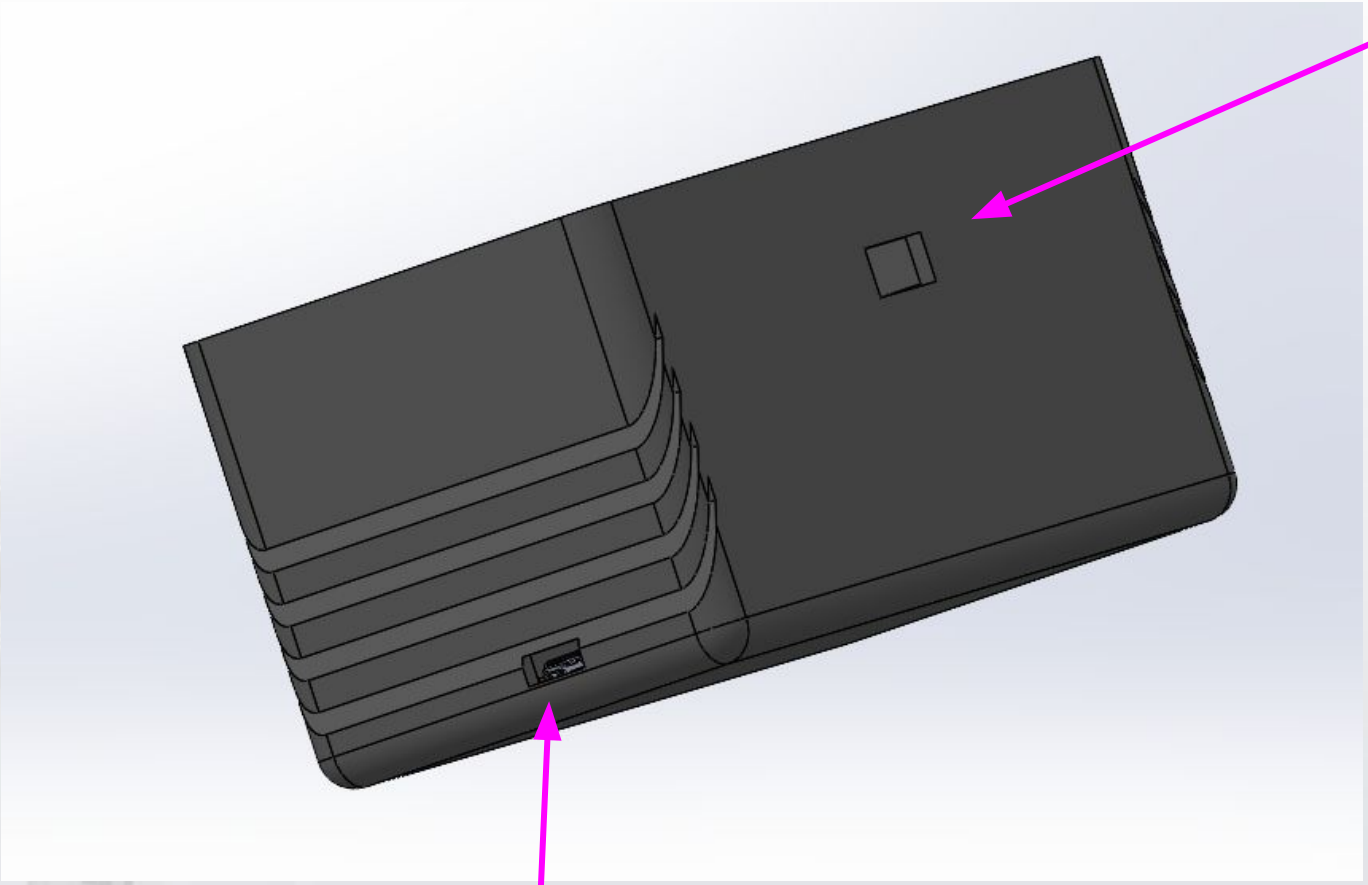

GEORGIA SOUTHERN UNIVERSITY

Realized Node Design

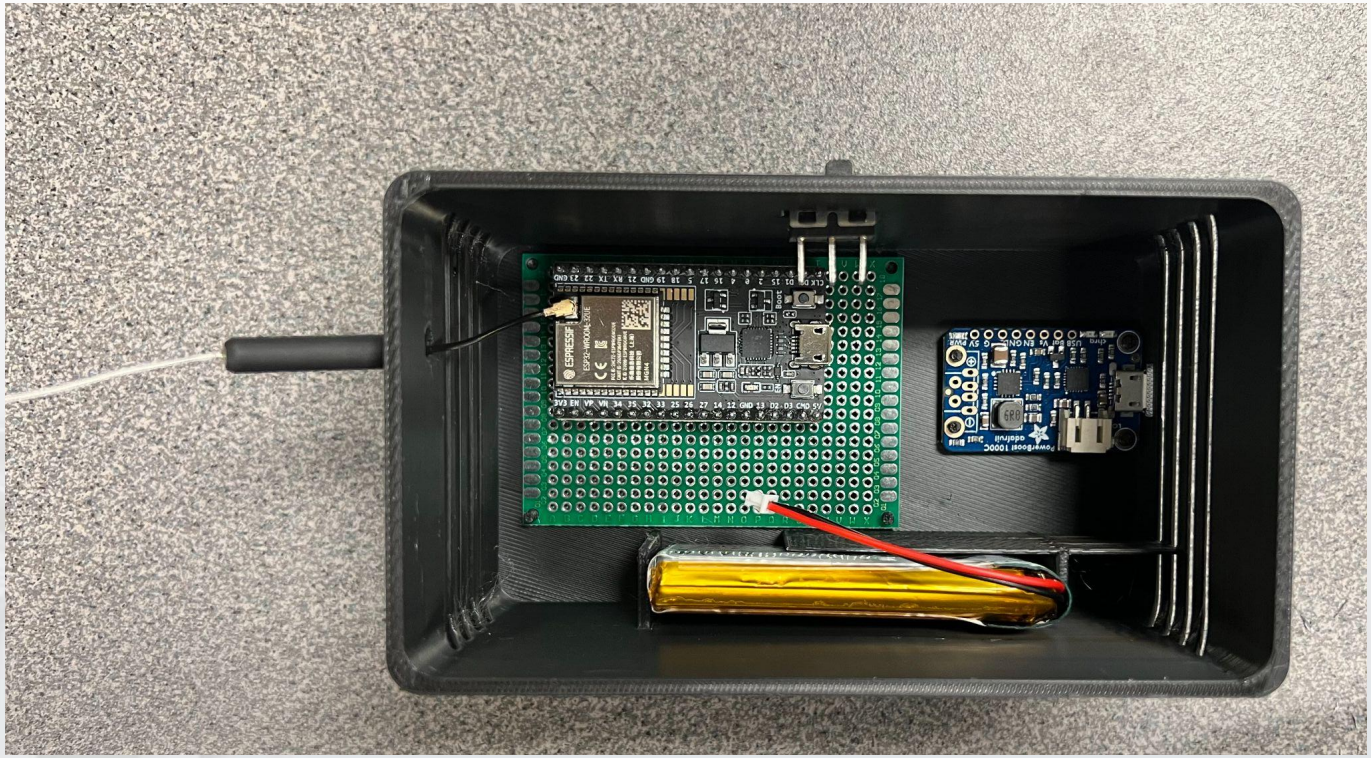

GEORGIA SOUTHERN UNIVERSITY

Project Results - Data Collection

```
=== Session Setup ===
Operator name        : Cole
Subject ID           : 34
Room width  (ft) [24] : 24
Room length (ft) [24] : 24
```

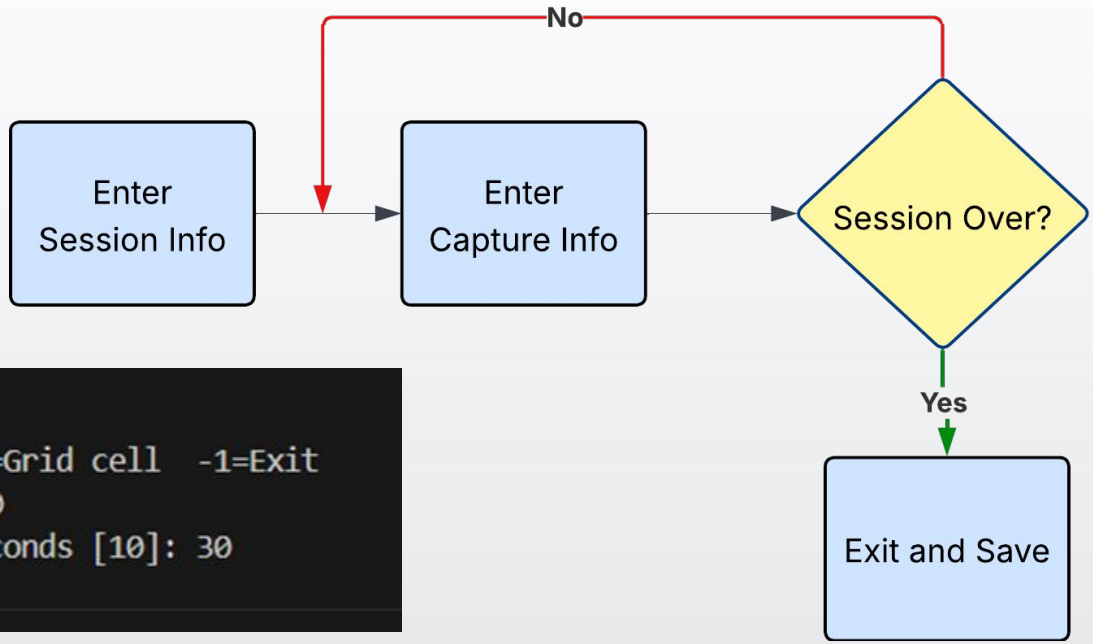


```
--- New Capture ---
Zone:  0=Empty  1-9=Grid cell  -1=Exit
Enter zone number: 0
Capture duration seconds [10]: 30
Run index [1]:
```

```
Zone:  0=Empty  1-9=Grid cell  -1=Exit
Enter zone number: -1
  [Writer] Saved csi_20260308_205554.bin  (75,211 bytes)
  [Writer] Saved csi_20260308_205559.bin  (74,755 bytes)
  [Writer] Saved csi_20260308_205604.bin  (75,449 bytes)

Stopping threads...
```

GEORGIA SOUTHERN UNIVERSITY

Initial Results - Data Collection

- Sample raw .csv ~2000 columns per row

GHV1 > data > raw > 24x24Room_Empty_30Seconds_Run01 > data.csv > data

```
timestamp_ms,label,zone_id,grid_row,grid_col,s1_amp_0,s1_amp_1,s1_am
500858,empty,0,0,0,116.4989,11.0,27.2544,26.6664,26.4283,25.3348,24.
501058,empty,0,0,0,116.4989,11.0,25.8631,25.4102,25.1387,24.2609,23.
501258,empty,0,0,0,116.4989,11.0,25.999,25.4075,24.9751,24.1296,23.2
501458,empty,0,0,0,116.4989,11.0,22.7852,21.7272,21.0246,20.1115,19.
501658,empty,0,0,0,116.4989,11.0,23.4801,22.8997,22.0192,21.0067,20.
501858,empty,0,0,0,116.4989,11.0,22.6109,22.109,21.2566,20.2878,19.3
502058,empty,0,0,0,116.4989,11.0,22.787,22.1254,21.3991,20.4611,19.6
502258,empty,0,0,0,116.4989,11.0,23.462,22.7628,22.2194,21.2587,20.3
502458,empty,0,0,0,116.4989,11.0,22.6297,22.2064,21.2915,20.7199,19.
502658,empty,0,0,0,116.4989,11.0,22.4227,21.5375,21.1559,20.3304,19.
502858,empty,0,0,0,116.4989,11.0,22.8533,22.4775,21.9748,21.1818,20.
503058,empty,0,0,0,116.4989,11.0,23.3085,22.6996,22.2322,21.2954,20.
503258,empty,0,0,0,116.4989,11.0,24.115,23.5838,23.1163,22.3999,21.8
```

GEORGIA SOUTHERN UNIVERSITY

Project Initial Results - EDA/ML

Data Collection

- Setup data collection documentation to standardize test data

Preprocessing

- Created a foundation for the test data to be put into

Model Selection

- Setup a pipeline that will go through several model evaluation techniques to help choose the best one

GEORGIA SOUTHERN UNIVERSITY

Project Initial Results - EDA/ML

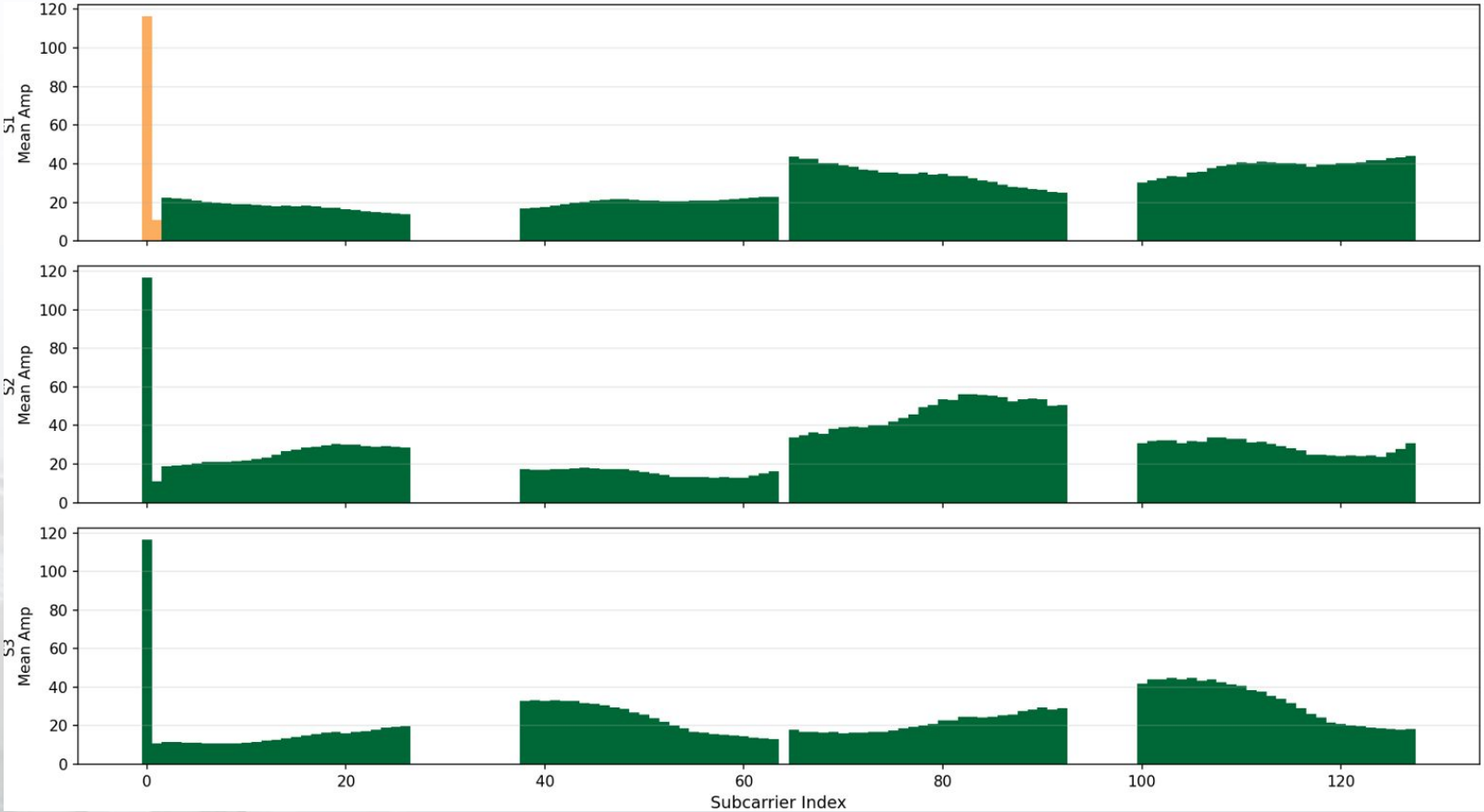

GEORGIA SOUTHERN UNIVERSITY

Project Initial Results - EDA/ML

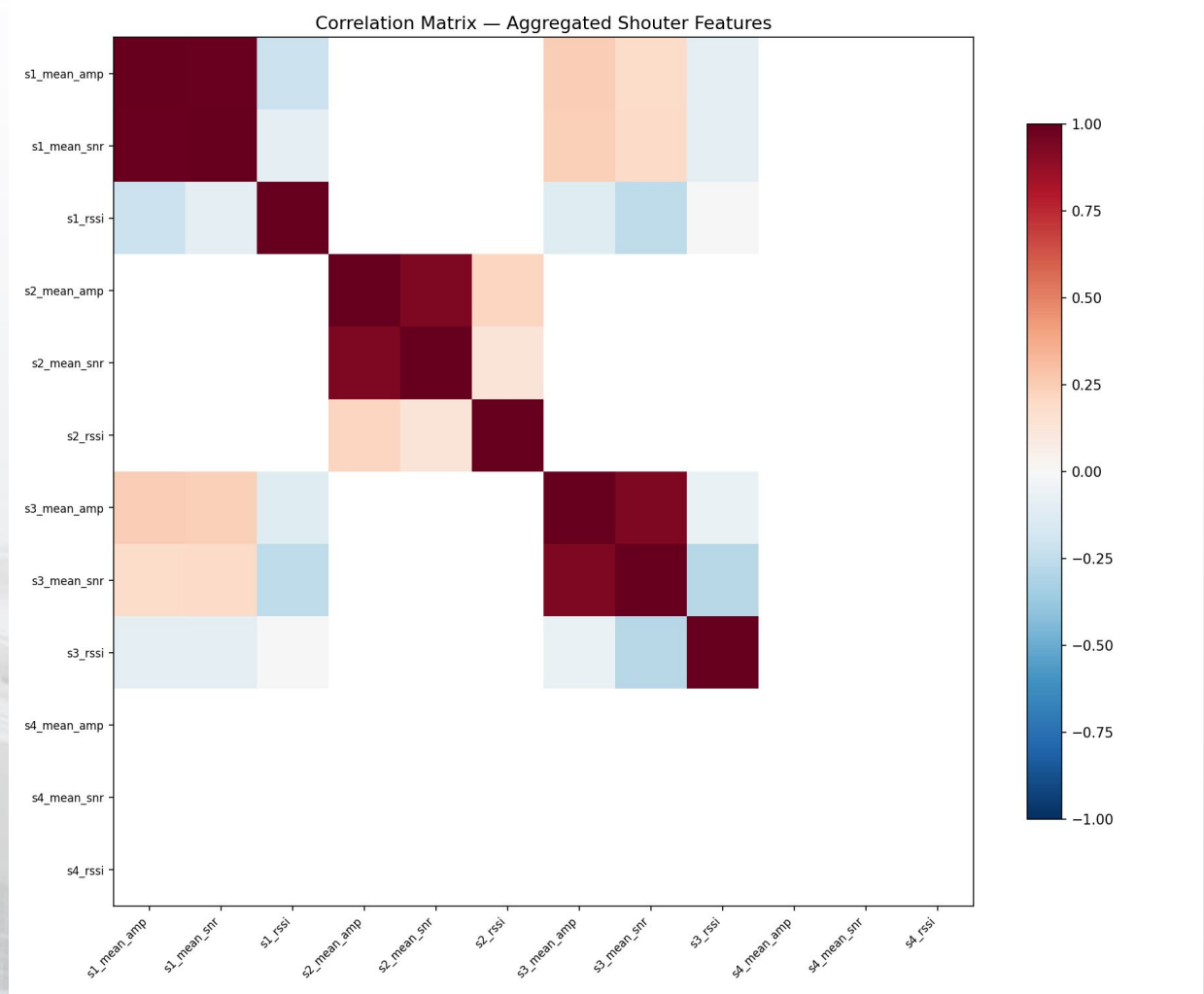

GEORGIA SOUTHERN UNIVERSITY

Deliverables

- A rugged, quick deploy system that can locate someone in a grid-like pattern with 85% accuracy in a quick amount of time
- Include a guide or manual that will be included in the Appendix section of the final report
- Documentation of steps and procedures
- Fully portable system prototype for demonstration

GEORGIA SOUTHERN UNIVERSITY

Conclusion/Future Work

- Signal Collision
- Extending Battery Life
- Loads of Testing
- Decide ML Metrics
- Train ML Model
- Brain Enclosure
- Antenna Deployment

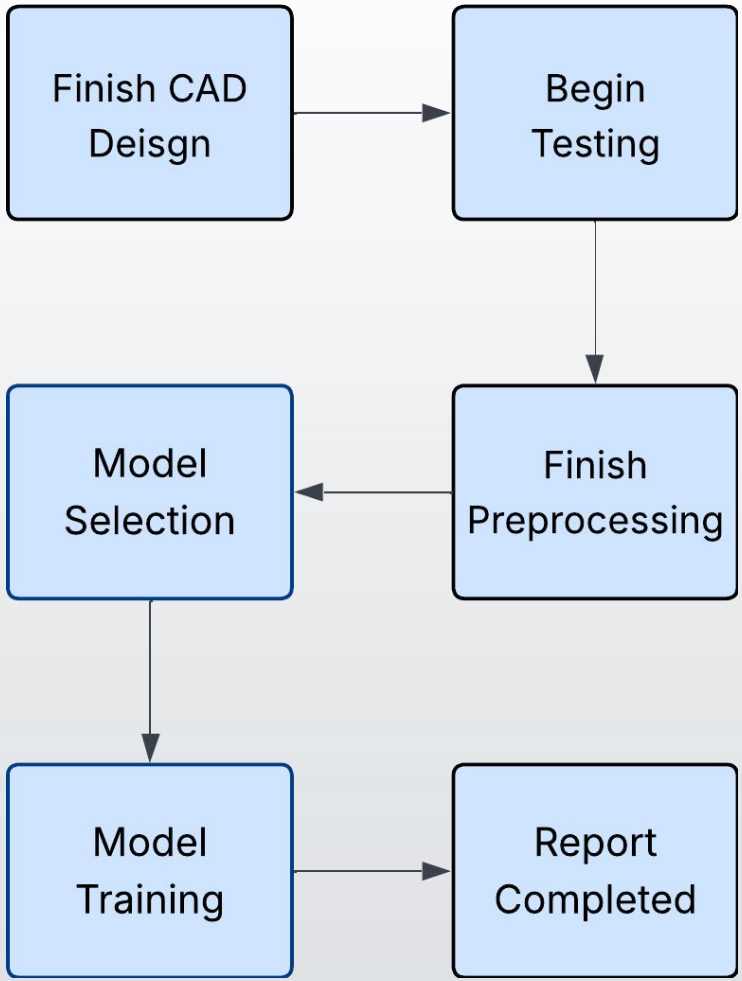

GEORGIA SOUTHERN UNIVERSITY

Questions?

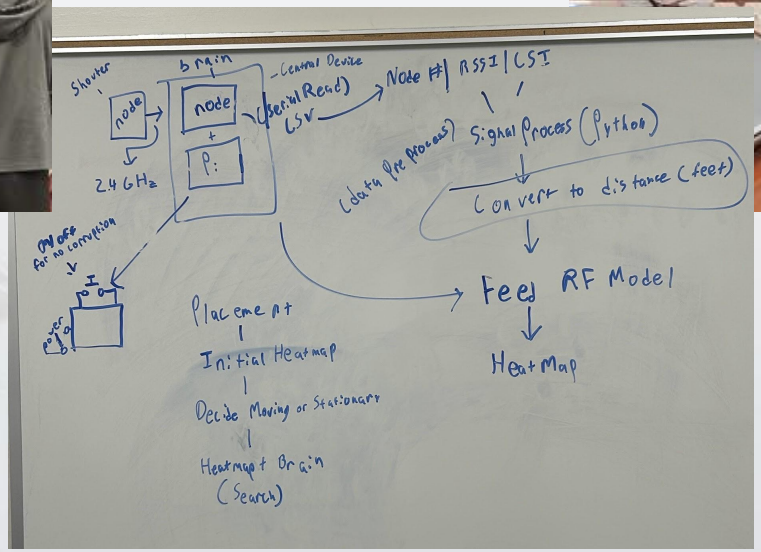

GEORGIA SOUTHERN UNIVERSITY

References

[1] "Search and Rescue Technology Helping Find Survivors Faster," Hutch Post. [Online]. Available: https://hutchpost.com/posts/f52a98ef-6744-40b2-a0e2-3caaa006e66e. [Accessed: Mar. 4, 2026].

[2] Search Dog Foundation, "Frequently Asked Questions." [Online]. Available: https://www.searchdogfoundation.org/faqs/. [Accessed: Mar. 4, 2026].

[3] Search Dog Foundation, "Search Team Fund FY 23–24." [Online]. Available: https://www.searchdogfoundation.org/search-team-fund-23-24-fy/. [Accessed: Mar. 4, 2026].

GEORGIA SOUTHERN UNIVERSITY

References

[4] National Disaster Search Dog Foundation, “About FEMA National US&R Response System.” [Online]. Available: http://disasterdog.org/. [Accessed: Mar. 4, 2026].

[5] Sensoft Technologies, “Rescue Radar – Detect Survivors in Rubble,” Product Brochure. [Online]. Available: https://www.sensoft.ca/wp-content/uploads/2025/08/Rescue-Radar-brochure.pdf. [Accessed: Mar. 4, 2026].

[6] IndiaMART, “Rescue Radar for Disaster Management – Find Survivors in Rubble.” [Online]. Available: https://www.indiamart.com/proddetail/rescue-radar-for-disaster-management-find-survivors-in-rubble-ndrf-sdrf-2857600739591.html. [Accessed: Mar. 4, 2026].

GEORGIA SOUTHERN UNIVERSITY

References

[7] M. Raja, A. Hughes, Y. Xu, P. Zarei, D. G. Michelson, and S. Sigg, "Wireless multi-frequency feature set to simplify human 3-d pose estimation," IEEE Antennas and Wireless Propagation Letters, vol. 18, no. 5, pp. 876–880, May 2019.

[8] N. Damodaran, E. Haruni, M. Kokhkharova et al., "Device free human activity and fall recognition using wifi channel state information (csi)," CCF Transactions on Pervasive Computing and Interaction, vol. 2, p. 1–17, 2020

[9] A. Rana, H. C. Kumawat, and A. A. B. Raj, "Wall see through low-velocity moving target detection," in 2023 IEEE 3rd Int. Conf. on Technol., Engineering, Management for Societal impact using Marketing, Entrepreneurship and Talent (TEMSMET), 2023, pp. 1–6.

GEORGIA SOUTHERN UNIVERSITY

References

[10] C. Uysal and T. Filik, “A new rf sensing framework for human detection through the wall,” IEEE Transactions on Vehicular Technology, vol. 72, no. 3, pp. 3600–3610, March 2023.

[11] S. Jo, S. Park, and G. I. Kwon, “Indoor human detection from a building’s exterior using 433 mhz wireless transceivers,” Sensors (Basel), vol. 23, no. 14, p. 6280, Jul 2023.

[12] Cambium Networks, “Antenna selection and positioning guide,” White paper, n.d. [Online]. Available: https://d2cpnw0u24fjm4.cloudfront.net/wp-content/upload/Antenna-Selection-and-Positioning-Guide.pdf

[13] IEEE Standard for Electromagnetic Energy Safety Programs, 0 Hz to 300 GHz, IEEE Std. C95.7-2022, 2023.

GEORGIA SOUTHERN UNIVERSITY