Original Drawing Size A1

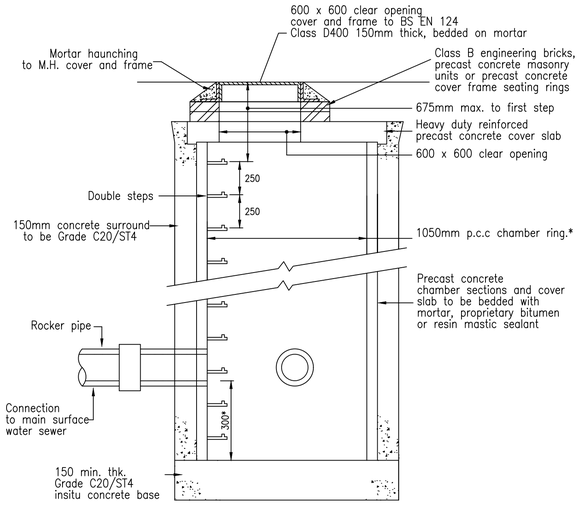

Catchpit Detail

(For pipes max 450mm diameter)

Gully grate & frame shall be kite marked to BS EN 124:1994. D400 captive hinged gully frame. Hinge to be located on side facing oncoming traffic. Minimum waterway area 1000cm2. Minimum frame depth 100mm or 150mm on A or B classified roads and industrial estates. A single gully cover & frame manufacturer must be used for each development. Gully frame to be bedded on epoxy resin based mortar.

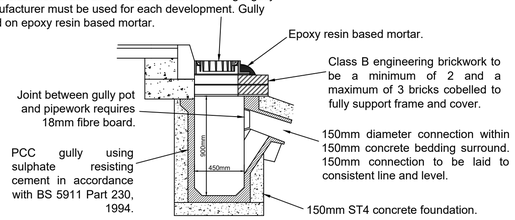

ROAD GULLY

NOTE:
PVCu plastic gully pots (BBA approved) may be utilised with the SBC Engineers written consent. A 150mm bed and surround of ST4 concrete must be utilised. Care must be taken to prevent the pot from distorting of floating when the concrete bed and surround is placed and compacted.

Specifically designed ironwork which allows blockwork to be laid directly up to the frame of the gully to be used in block-paved carriageways. Minimum 150mm depth ironwork to be used in block paved carriageways.

Construction Design and Management (CDM)
Key Residual Risks

Contractors entering the site should gain permission from the relevant land owners and/or principle contractor working on site at the time of entry. Contractors shall be responsible for carrying out their own risk assessments and for liaising with the relevant services companies and authorities. Listed below are Site Specific key risks associated with the project.

1) Overhead and underground services
2) Street Lighting Cables
3) Working adjacent to water courses and flood plain
4) Soft ground conditions
5) Working adjacent to live highways
6) Uncharted services

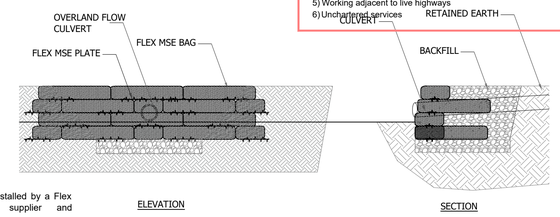

NOTES:
1. Flex MSE to be installed by a Flex MSE approved supplier and installer.
2. Hydroseeding will be required with all installations.
3. Headwall to be read in conjunction with drainage drawings which show the section of the overland flow.

FLEX MSE HEADWALL (FOR USE WITH OVERLAND FLOW)

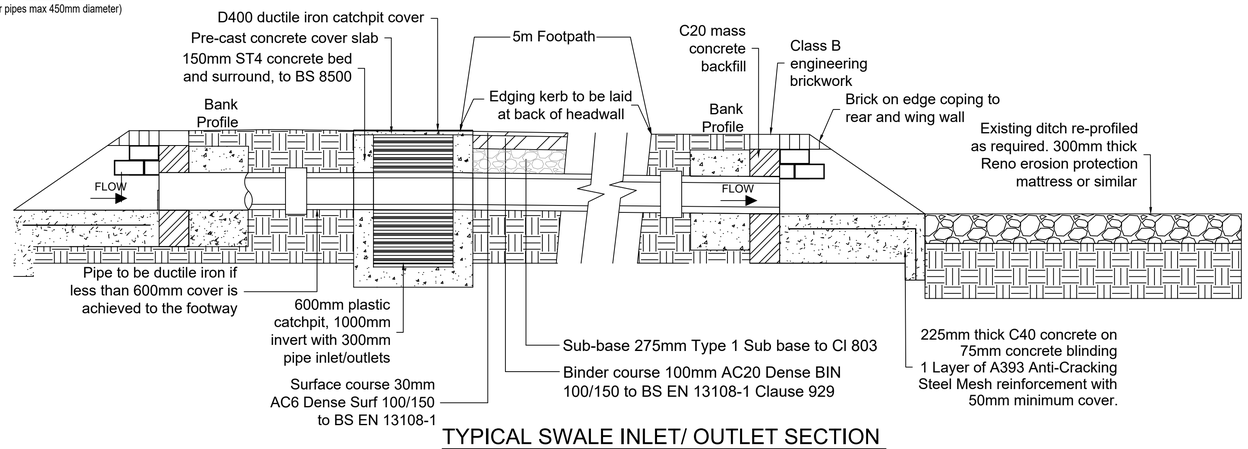

TYPICAL SWALE INLET/ OUTLET SECTION

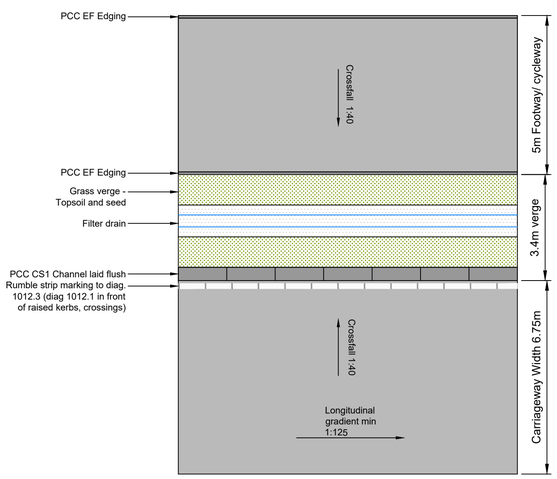

HIGHWAY PLAN VIEW

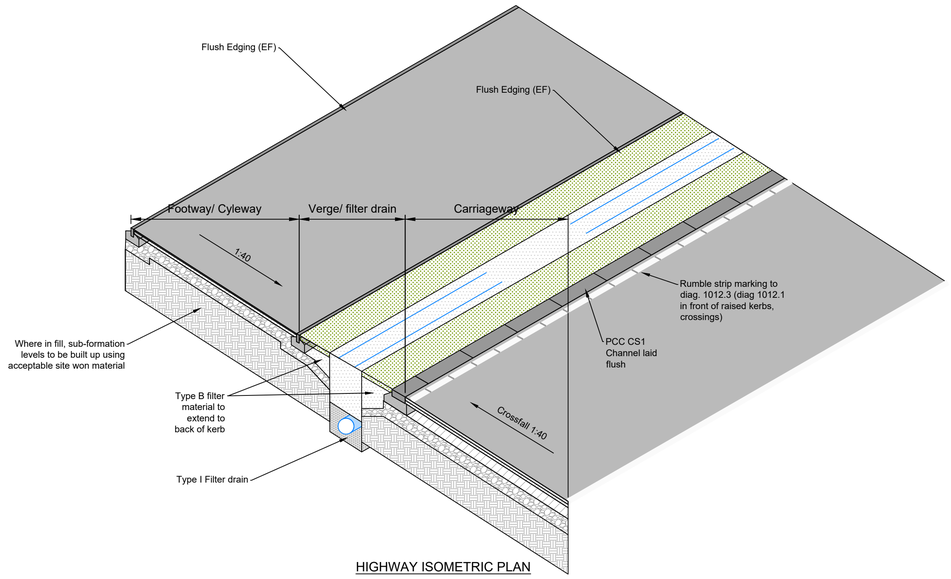

HIGHWAY ISOMETRIC PLAN

NOTES:

1. Do not scale from this drawing.
2. All dimensions are in metres unless otherwise stated.
3. Brookbanks consulting ltd has prepared this drawing for the sole use of the client. the drawing may not be relied upon by any other party without the express agreement of the client and Brookbanks consulting ltd. where any data supplied by the client or from other sources has been used, it has been assumed that the information is correct. no responsibility can be accepted by Brookbanks consulting ltd for inaccuracies in the data supplied by any other party. the drawing has been produced based on the assumption that all relevant information has been supplied by those bodies from whom it was requested.
4. No part of this drawing may be copied or duplicated without the express permission of Brookbanks consulting ltd.
5. All dimensions and all levels in metres unless noted otherwise.
6. Any discrepancies noted on site are to be reported to the engineer immediately.
7. Section 278 agreement highway works to carried out in strict accordance with Swindon Borough council's requirements.
8. All works within existing public highway, including any temporary works or traffic management measures, are subject to the approval of Swindon Borough Council. when works are required on the public highway, the contractor shall liaise with and obtain all statutory approvals from Swindon Borough Council, before commencing these works. these approvals include, but are not limited to, approval of traffic management measures, issue of works commencement notices, road opening notices, temporary traffic regulation orders etc.
9. All traffic management shall comply with the requirements as set out in chapter 8 of the traffic signs manual. warning signs may be erected outside the indicated boundaries. any obstructions to traffic or pedestrians shall be properly signed and protected with barriers, cones, signs, and lamps.
10. All planting in visibility splays to be agreed and approved by Swindon Borough Council and in all cases no planting to be above 600mm in height above the carriageway. also no obstructions of any kind within the visibility splay areas.
11. All tactile areas to be laid in accordance with detr "guidance on the use of tactile paving surfaces".
12. All crossings are to be surfaced with a classic red ulticolour.
13. All traffic signs and road markings are to be in accordance with the 'Traffic Signs Regulations and General Directions 2016'.
14. Any damage caused to existing footways, roads or other third party property to be made good to the county engineers requirements.
15. Temporary works associated with the construction of the works shall be the responsibility of the contractor.
16. Lanterns to be Uris Axia (3rd Gen) and fitted with a telecell to work with Telensa CMS system. Lantern Colour Temperatures shall be 3000k. All columns shall be Galvanised CU Phosco or equivalent RAL 9002 (Grey white) shall be provided for all lumineres. All columns located within pedestrianised areas (e.g. footways/shared surfaces) shall include a 150mm white retroreflective band 1.6m above ground to provide a visual aid to partially sighted road users as to the presence of the columnn in accordance with the Associate of the Blind requirements.

B	Revised with latest layouts for tender	JHI	CM	SM	14.01.25
A	Updated for RMA submission	CM	CM	SM	26.07.24
-	First Issue	CM	CM	SM	09.05.24

BROOKBANKS

6150 Knights Court, Solihull Parkway, Birmingham, B37 7WY
T +44 (0)203 958 5400 E mail@brookbanks.com
W brookbanks.com

Swindon EDA Consortium

Proposed Development
Swindon EV Phase 1

South Marston Primary Street
Standard Details
Sheet 5 of 5

Status		Status Date
Tender		MAY 2024
Drawn	Checked	Date
CM	SM	09.05.24
Scale	Number	Rev
NTS	1335-SMPS-100-155	B

TENDER

UNTIL TECHNICAL APPROVAL HAS BEEN OBTAINED FROM THE RELEVANT LOCAL AUTHORITIES, IT SHOULD BE UNDERSTOOD THAT ALL DRAWINGS ARE ISSUED AS PRELIMINARY AND NOT FOR CONSTRUCTION. SHOULD THE CONTRACTOR COMMENCE SITE WORK PRIOR TO APPROVAL BEING GIVEN, IT IS ENTIRELY AT HIS OWN RISK.

© Brookbanks Consulting Limited 2024

P:\1335\CAD\BCL\Current Drawings\S38- South Marston Primary Street\1335-SMPS-100-151C,152C,153A, 154C, 155B - South Marston Primary Street Standard Details.dwg