Original Drawing Size A1

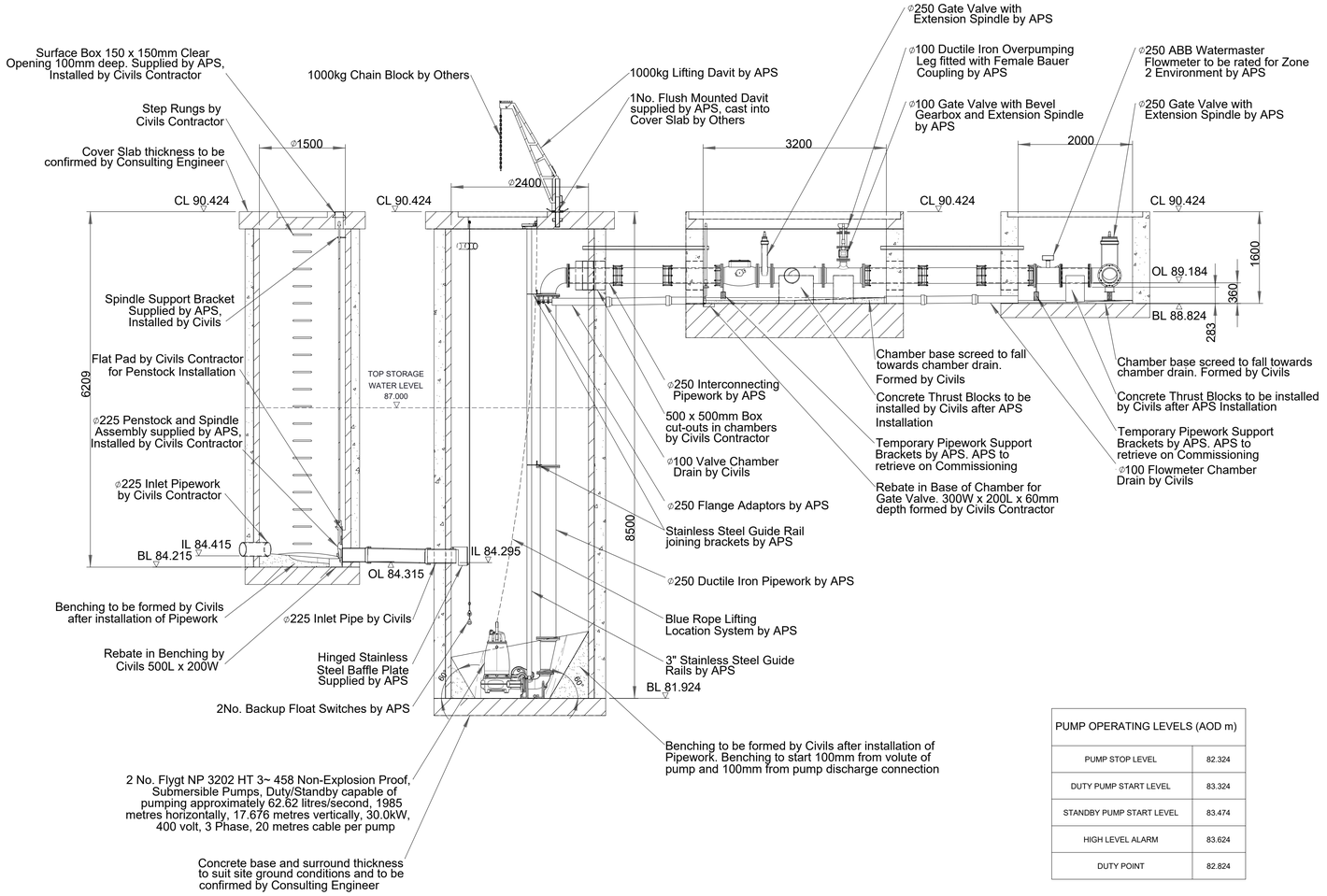

SECTIONAL ELEVATION

1:50

PUMP OPERATING LEVELS (AOD m)	
PUMP STOP LEVEL	82.324
DUTY PUMP START LEVEL	83.324
STANDBY PUMP START LEVEL	83.474
HIGH LEVEL ALARM	83.624
DUTY POINT	82.824

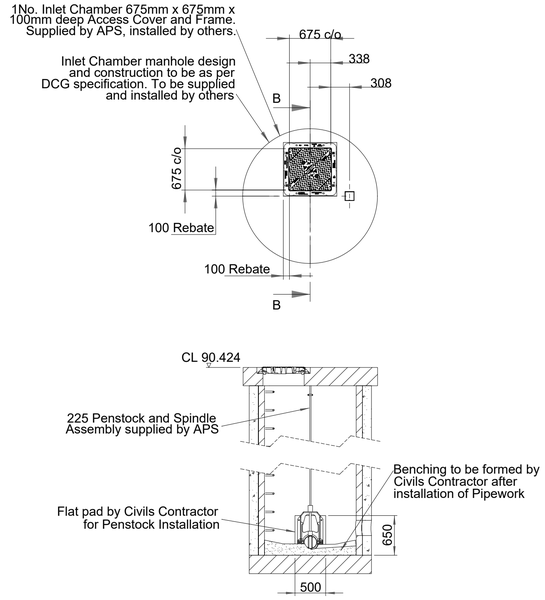

SECTIONAL ELEVATION INLET CHAMBER

B-B 1:50

Construction Design and Management (CDM)

Key Residual Risks

Contractors entering the site should gain permission from the relevant land owners and/or principle contractor working on site at the time of entry. Contractors shall be responsible for carrying out their own risk assessments and for liaising with the relevant services companies and authorities. Listed below are Site Specific key risks associated with the project.

1) Overhead and underground services
2) Street Lighting Cables
3) Working adjacent to water courses and flood plain
4) Soft ground conditions
5) Working adjacent to live highways and railway line
6) Unchartered services
7) Existing buildings with potential asbestos hazards

NOTES:

1. Only scale for planning purposes.
2. All dimensions are in metres unless otherwise stated.
3. Brookbanks Consulting Ltd has prepared this drawing for the sole use of the client. The drawing may not be relied upon by any other party without the express agreement of the client and Brookbanks Consulting Ltd. Where any data supplied by the client or from other sources has been used, it has been assumed that the information is correct. No responsibility can be accepted by Brookbanks Consulting Ltd for inaccuracies in the data supplied by any other party. The drawing has been produced based on the assumption that all relevant information has been supplied by those bodies from whom it was requested.
4. No part of this drawing may be copied or duplicated without the express permission of Brookbanks Consulting.
5. Details should be read in conjunction with pump manufacturer's.
6. Details are to be in accordance with Sewerage Sector Guidance - Appendix C - Design & Construction Guidance and Thames Water requirements.

-	First Issue	JHI	SM	SM	07.01.25

BROOKBANKS

W: www.brookbanks.com E: hello@brookbanks.com

Swindon EDAG

Swindon EDA

S104 - Vicarage Lane - Signalised Junction
FWPS Sectional Elevation

Status		Status Date
Approval		Jan 2025
Drawn	**Checked**	**Date**
JHI	SM	07.01.2025
Scale	**Number**	**Rev**
1:50	1335-S104-500-042	-

0 1 2 3 4 5
METRES

UNTIL TECHNICAL APPROVAL HAS BEEN OBTAINED FROM THE RELEVANT LOCAL AUTHORITIES, IT SHOULD BE UNDERSTOOD THAT ALL DRAWINGS ARE ISSUED AS PRELIMINARY AND NOT FOR CONSTRUCTION. SHOULD THE CONTRACTOR COMMENCE SITE WORK PRIOR TO APPROVAL BEING GIVEN, IT IS ENTIRELY AT THEIR OWN RISK.

© Brookbanks Consulting Limited 2025
P:\1335\CAD\BCL\Current Drawings\S104\1335_S104_500_042 Foul Water Pumping Station Sectional Elevation.dwg