Original Drawing Size A1

UNTIL TECHNICAL APPROVAL HAS BEEN OBTAINED FROM THE RELEVANT LOCAL AUTHORITIES, IT SHOULD BE UNDERSTOOD THAT ALL DRAWINGS ARE ISSUED AS PRELIMINARY AND NOT FOR CONSTRUCTION. SHOULD THE CONTRACTOR COMMENCE SITE WORK PRIOR TO APPROVAL BEING GIVEN, IT IS ENTIRELY AT THEIR OWN RISK.

Construction Design and Management (CDM)
Key Residual Risks

Contractors entering the site should gain permission from the relevant land owners and/or principle contractor working on site at the time of entry. Contractors shall be responsible for carrying out their own risk assessments and for liaising with the relevant services companies and authorities. Listed below are Site Specific key risks associated with the project.

1) Overhead and underground services
2) Street Lighting Cables
3) Working adjacent to water courses and flood plain
4) Soft ground conditions
5) Working adjacent to live highways and railway line
6) Unchartered services

NOTES:

1. Only scale for planning purposes.
2. All dimensions are in metres unless otherwise stated.
3. Brookbanks Consulting Ltd has prepared this drawing for the sole use of the client. The drawing may not be relied upon by any other party without the express agreement of the client and Brookbanks Consulting Ltd. Where any data supplied by the client or from other sources has been used, it has been assumed that the information is correct. No responsibility can be accepted by Brookbanks Consulting Ltd for inaccuracies in the data supplied by any other party. The drawing has been produced based on the assumption that all relevant information has been supplied by those bodies from whom it was requested.
4. No part of this drawing may be copied or duplicated without the express permission of Brookbanks Consulting.

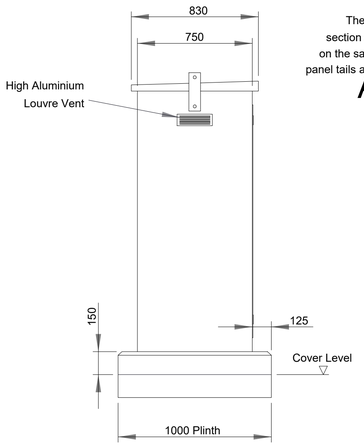

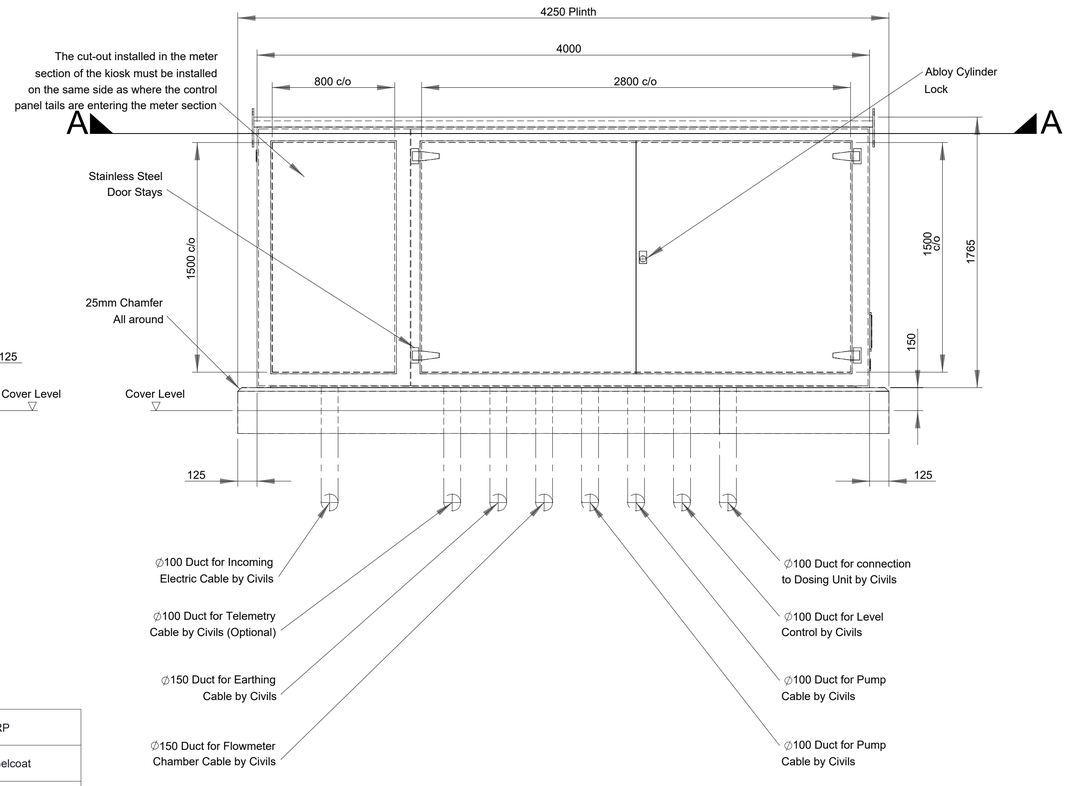

Construction	GRP
External Finish	Satin Gelcoat
Colour	BS4800 14-C-39 Dark Green
Internal Finish	Matt White

MCC KIOSK
PLAN VIEW 1:20

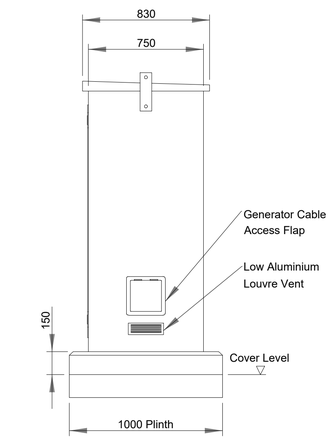

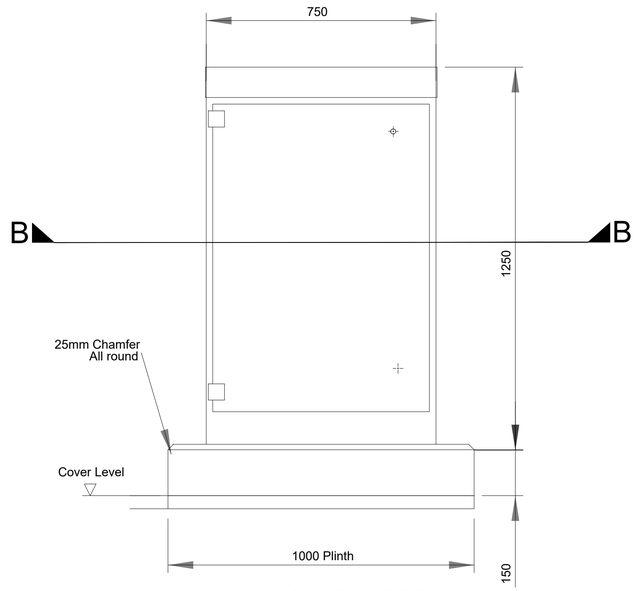

JUNCTION BOX KIOSK
PLAN VIEW 1:10

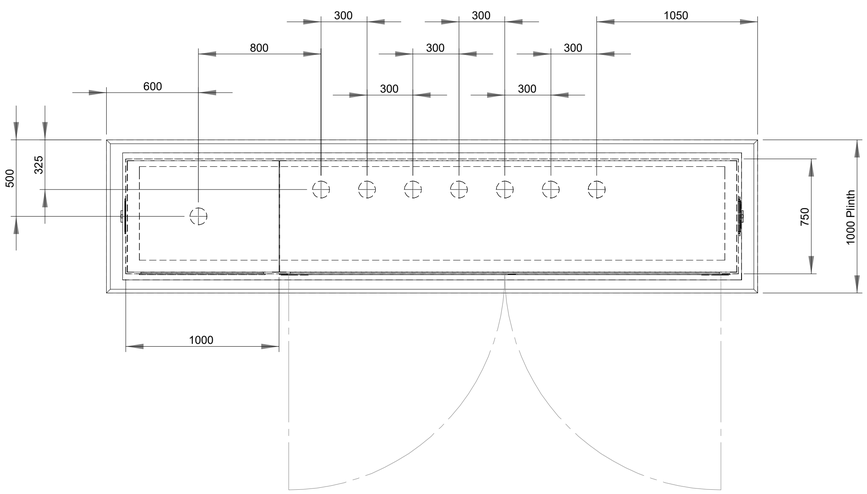

A-A SECTION
1:20

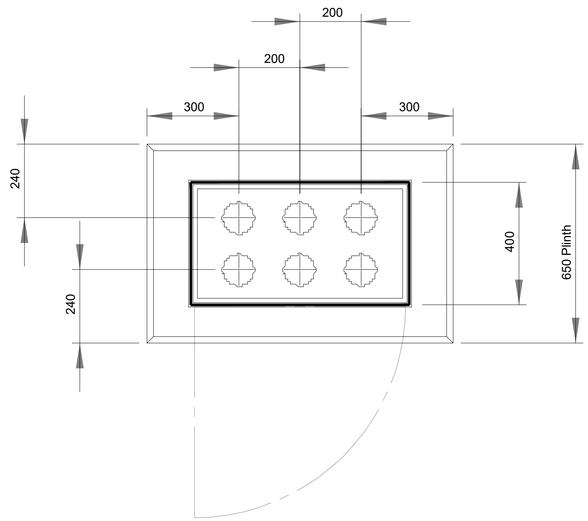

B-B SECTION
1:10

- First Issue	JHI SM	SM 08.01.25

BROOKBANKS

W: www.brookbanks.com E: hello@brookbanks.com

Swindon EDAG

Swindon EDA

S104 - Vicarage Lane - Signalised Junction FWPS Kiosk Details

Status		Status Date
Approval		Jan 2025
Drawn	Checked	Date
JHI	SM	08.01.2025
Scale	Number	Rev
1:20	1335-S104-500-043	-

0 4 8 12 16 20
METRES

© Brookbanks Consulting Limited 2025
P:\1335\CAD\BCL\Current Drawings\S104\1335_S104_500_043 Foul Water Pumping Station Kiosk Chamber Detail.dwg