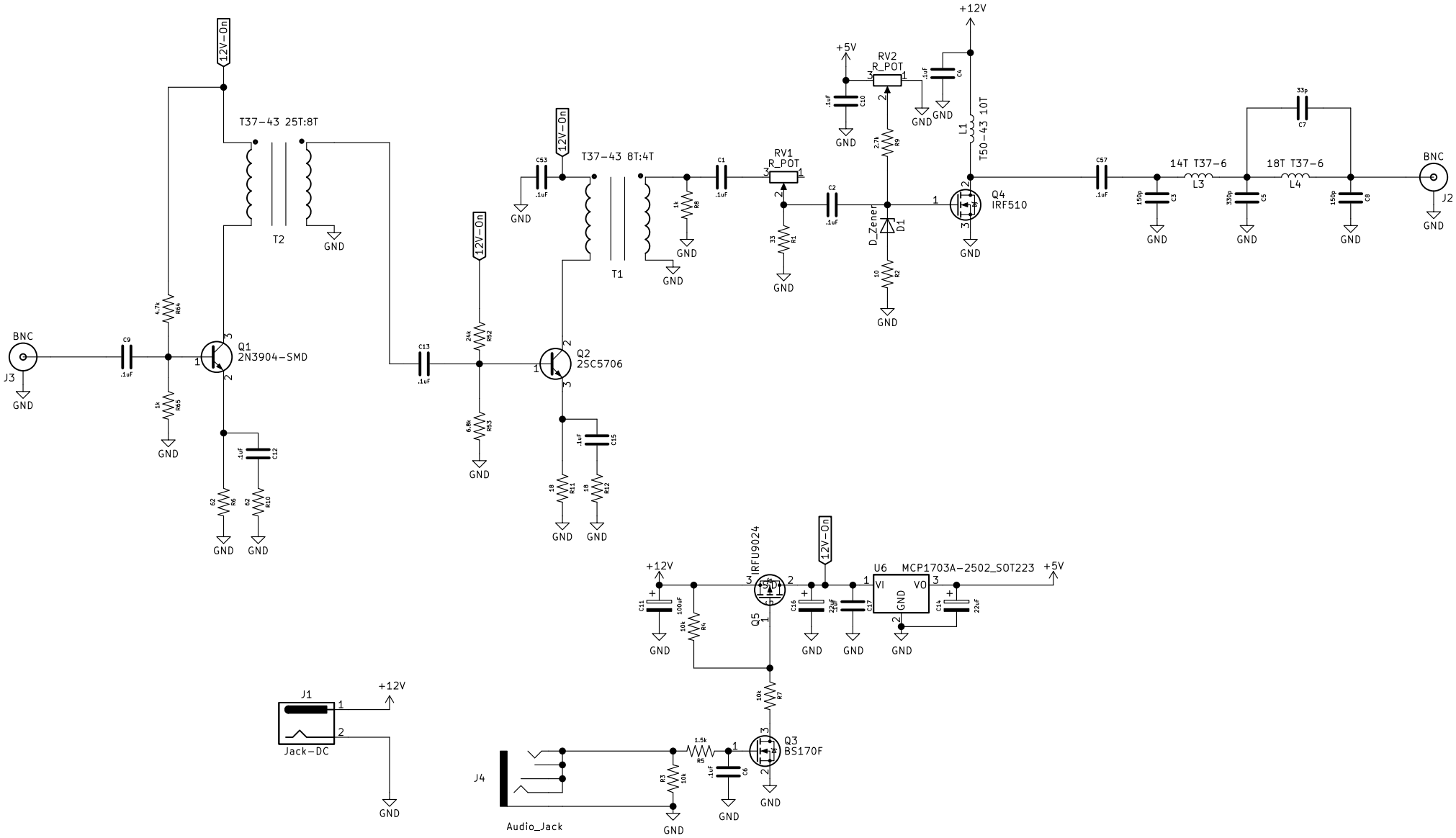
12V-On
T37-43 25T:8T
T2
GND
BNC
J3
C9
.1uF
4.7k
R64
1k
R65
Q1
2N3904-SMD
.1uF
C12
62
R6
62
R10
C13
.1uF
24k
R52
6.8k
R53
Q2
2SC5706
.1uF
C15
18
R11
18
R12
C53
.1uF
T37-43 8T:4T
T1
1k
R8
C1
.1uF
RV1
R_POT
33
R1
C2
.1uF
+5V
RV2
R_POT
.1uF
C10
.1uF
C4
2.7k
R9
D_Zener
D1
10
R2
+12V
L1
T50-43 10T
Q4
IRF510
C57
.1uF
150p
C3
14T T37-6
L3
330p
C5
18T T37-6
L4
33p
C7
150p
C8
BNC
J2
+12V
C11
100uF
10k
R4
IRFU9024
Q5
12V-On
C16
22uF
C17
U6
MCP1703A-2502_SOT223
VI
VO
GND
C14
22uF
+5V
10k
R7
Q3
BS170F
J1
Jack-DC
+12V
J4
Audio_Jack
R3
10k
1.5k
R5
.1uF
C6