Band	C1, C6	C2, C5	C3	C4	T1, T2	Extra
160m	30p trimmer	820p ("821")	56p ("560")	22p ("220")	T50-2, 8.56uH, 7:40t	12p ("120")
80m	30p trimmer	470p ("471")	39p ("390")	10p ("100")	T37-2, 3.83uH, 6:30t	12p ("120")
60m	30p trimmer	220p ("221")	10p ("100")	5p ("050")	T37-2, 4.12uH, 6:31t	
40m	30p trimmer	150p ("151")	10p ("100")	5p ("050")	T37-6, 3.02uH, 6:31t	
30m	30p trimmer	100p ("101")	8p ("080")		T37-6, 2.11uH, 5:25t	10p ("100")
20m	30p trimmer	68p ("680")	6p ("060")		T37-6, 1.53uH, 4:21t	10p ("100")
20m	30p trimmer	56p ("560")	6p ("060")		T37-6, 1.79uH, 4:24t	
17m	30p trimmer	47p ("470")	4p ("040")		T37-6, 1.41uH, 3:19t	10p ("100")
15m	30p trimmer	33p ("330")	3p ("030")		T37-6, 1.14uH, 3:18t	10p ("100")
12m	30p trimmer	22p ("220")	3p ("030")		T37-6, 1.10uH, 3:17t	10p ("100")
10m	30p trimmer		2p ("020")		T37-6, 1.40uH, 3:16t	10p ("100")

R BIAS	
Vcc	"1%" Res. Values (ohms) for Optimum Biasing
6	154
7	215
8	280
9	340
10	402
11	464
12	536
13	590
14	665

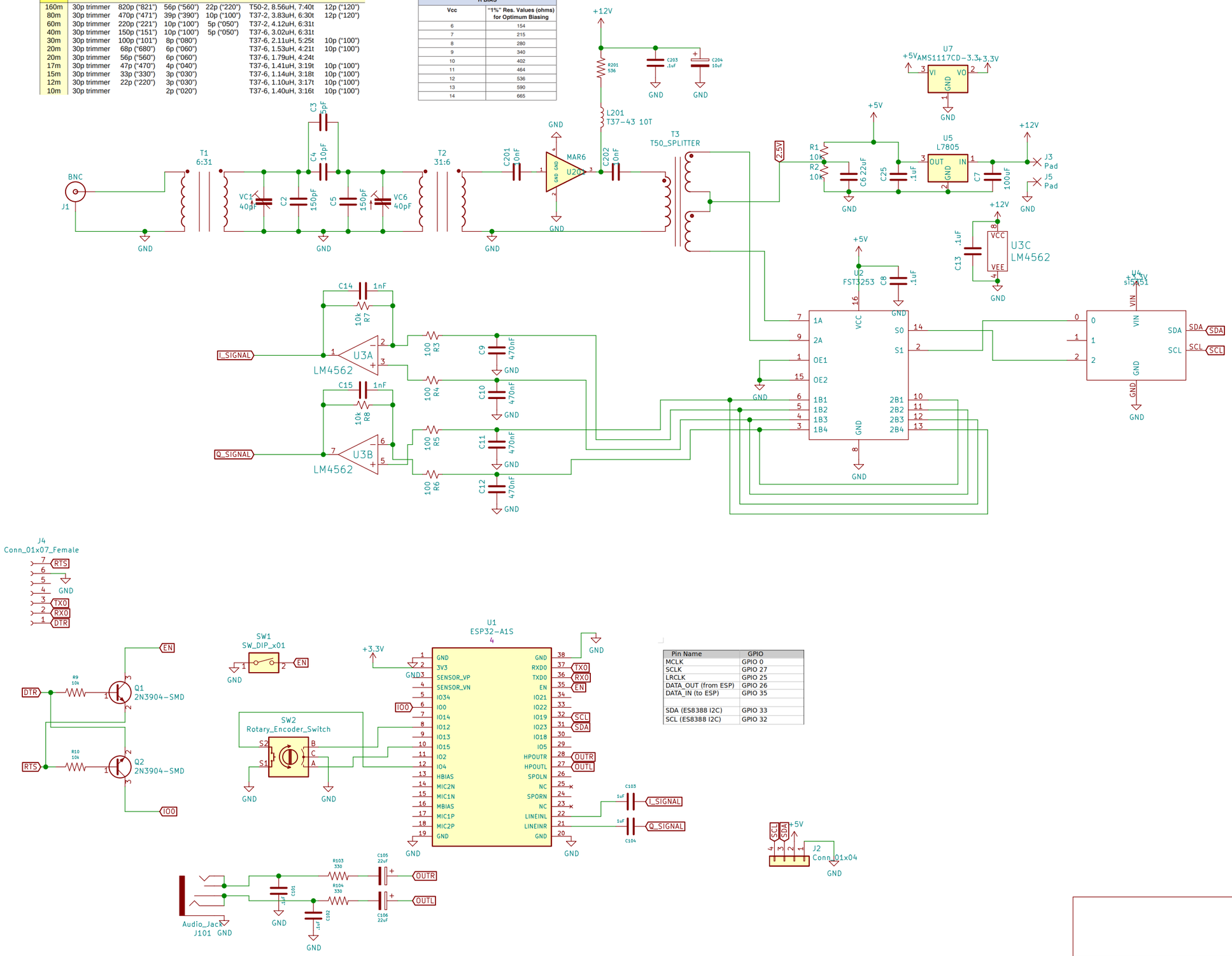

Pin Name	GPIO
MCLK	GPIO 0
SCLK	GPIO 27
LRCLK	GPIO 25
DATA_OUT (from ESP)	GPIO 26
DATA_IN (to ESP)	GPIO 35
SDA (ES8388 I2C)	GPIO 33
SCL (ES8388 I2C)	GPIO 32

Sheet: /
File: Tayloe-Mixer-v3.sch

Title:

Size: A3	Date:	Rev:
KiCad E.D.A. kicad 5.1.12-unknown-nightly-202202221509		Id: 1/1