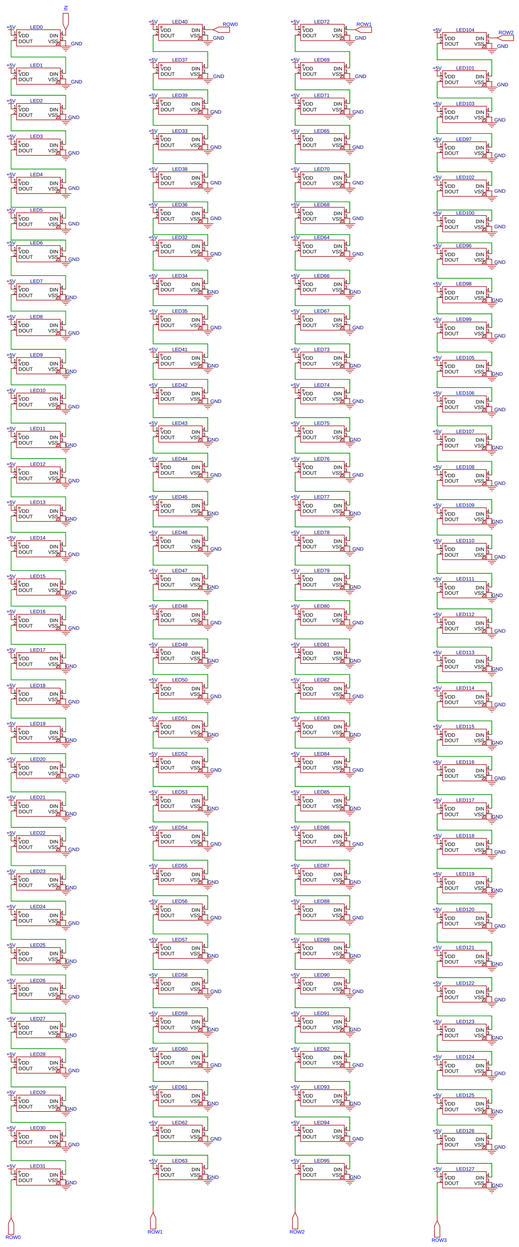

Schematic	Schematic1	Create at	2026-04-02
		Update at	2026-04-02
Board	Board1	Page	P1
Drawn	LED MATRIX		
Reviewed			
	Version	Size	Page 1 Total 3
EasyEDA	V1.0	A4	EasyEDA.com

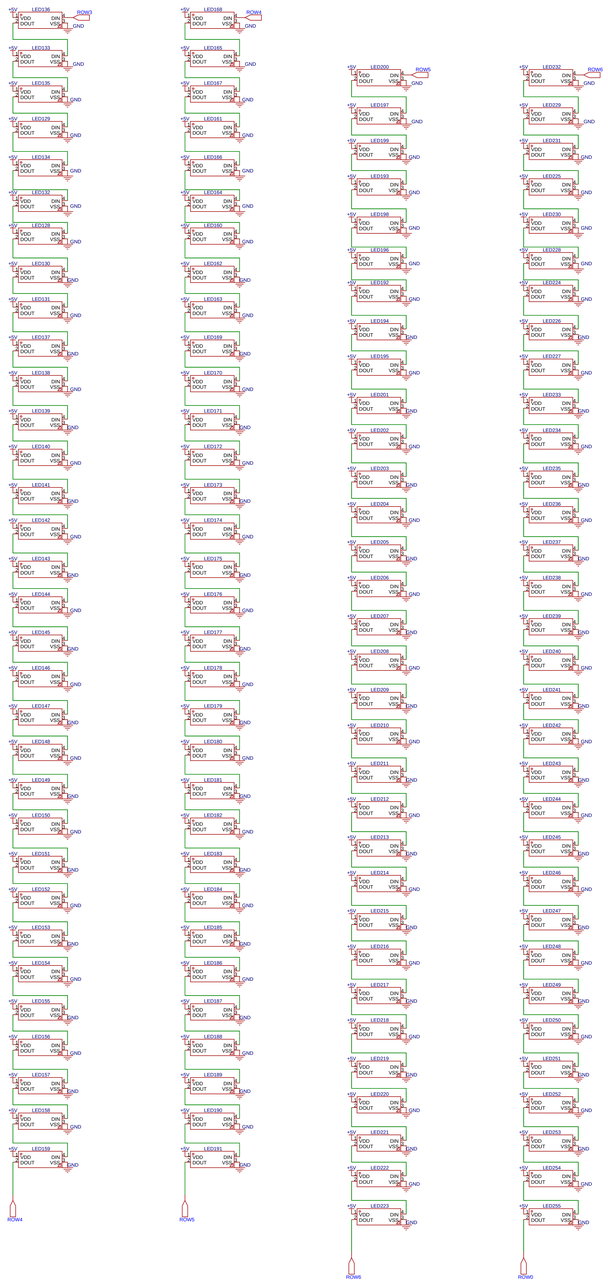

Schematic	Schematic1	Create at	2026-04-02
		Update at	2026-04-02
Board	Board1	Page	P2
Drawn	LED MATRIX		
Reviewed			
	Version	Size	Page 2 Total 3
EasyEDA	V1.0	A4	EasyEDA.com

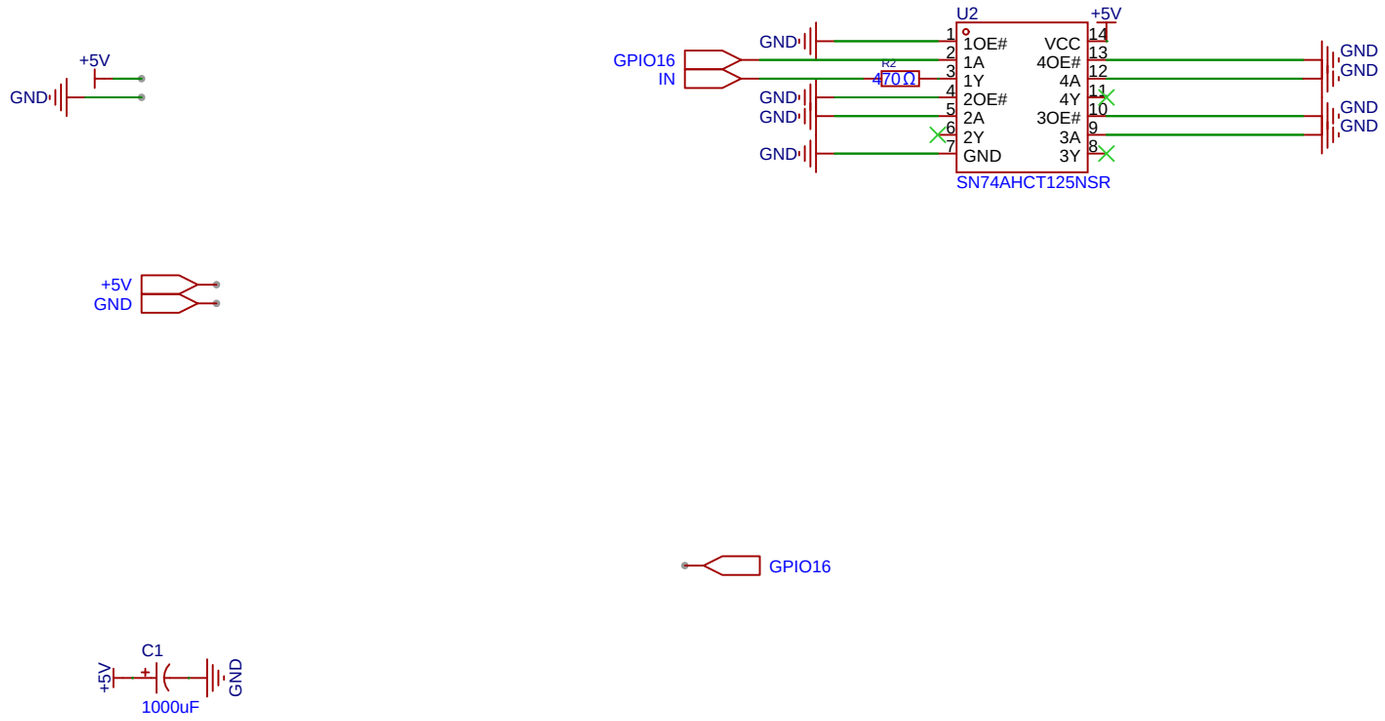

Schematic	Schematic1	Create at	2026-04-02
		Update at	2026-04-04
Board	Board1	Page	P3
Drawn		LED MATRIX	
Reviewed			
		Version	Size	Page 3 Total 3
EasyEDA		V1.0	A4	EasyEDA.com