Operating and Mounting Instructions

Speed Sensor
2-Channel Differential-Hall Flange FC series

RHEINTACHO Messtechnik GmbH · Waltershofener Str. 1 · D-79111 Freiburg
phone +49 761 4513 0 · www.rheintacho.com

1 Application

Sensor for the measurement of rotational speed and direction of ferro-magnetic materials with detectable surface. E.g. gears with modules 1 ... 2.5.

2 Technical data

Detailed technical data can be found on our homepage:
www.rheintacho.com

3 Scope of delivery

• Speed sensor FC
• O-Ring
• Operating and mounting instructions (depending on type)

4 Mounting and safety precaution

• Do not mount electrical connection with an open current
• Only install when machinery is out of operation

5 Mechanical attachment

For correct alignment, please see installation drawing and check datasheet at www.rheintacho.com
• Mount the O-ring properly
• Tighten the screws with max. 10 Nm torque

NOTE
Tightening torque is valid for screws with a property class of min. 10.9, screwed dry in steel.

All work on the product must be made by qualified electrical personnel only!

6 Electrical connections

6a Cable terminal assignment
Brown: VDC
Blue: Signal 1
Black: Ground
White: Signal 2

6b Cable with plug terminal assignment
AMP Junior Timer
Pin 1: VDC
Pin 2: Signal 1
Pin 3: Ground
Pin 4: Signal 2

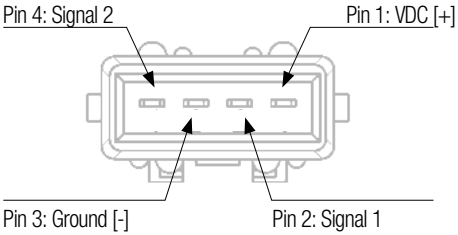

Binder M12
Pin 1: VDC
Pin 2: Signal 1
Pin 3: Ground
Pin 4: Signal 2

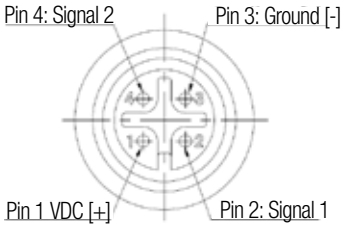

7 Maintenance

The sensor is maintenance free!

8 Installation drawing

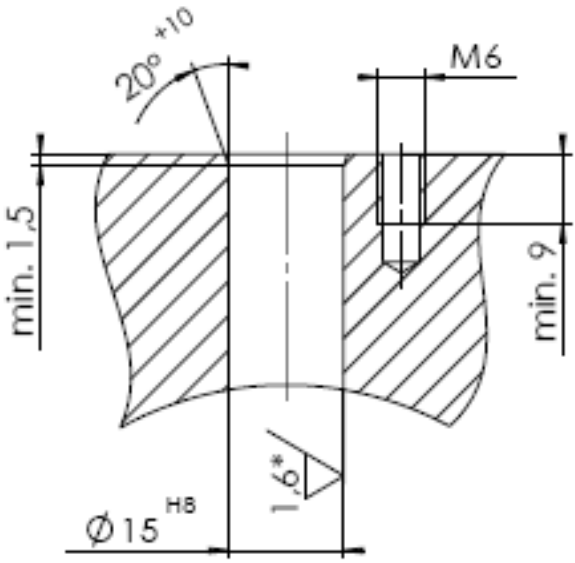

NOTE

Detailed technical data can be found on our homepage www.rheintacho.com or just scan the QR code:

Printed declarations of conformities on request

We reserve the right to make technical changes without prior notice. We have taken the utmost care to prevent errors. Liability in the event of any errors shall be excluded.

N0001.207D - Status December 2024