2024 6th International Conference on Robotics, Intelligent Control and Artificial Intelligence (RICAI)

A transfer-based adversarial attack method

1st Lu Li
Defence Industry Secrecy Examination and Certification Center
Beijing,China

2nd Fengming Zhu
Hangzhou Research Institute
Xidian University
Hangzhou, China

3rd Zichen Yang*
Eighth Research Institute
China State Shipbuiloing Corporation Limiteo
Nanjing, China
yzc980911@163.com

2024 6th International Conference on Robotics, Intelligent Control and Artificial Intelligence (RICAI) | 979-8-3315-4169-9/24/$31.00 ©2024 IEEE | DOI: 10.1109/RICAI64321.2024.10911455

***Abstract*—Deep convolutional neural network models are vulnerable to adversarial attacks, which can lead to incorrect classification by the model. This adversarial attack has become one of the challenges facing the full-scale deployment of artificial intelligence. Examining adversarial attacks, especially in image recognition, is beneficial. It not only uncovers the weaknesses of deep convolutional neural networks but also enhances our understanding of the security threats associated with deep neural networks, thereby facilitating their enhancement. Through an in-depth analysis of the principles behind adversarial attacks, this paper proposes an adversarial attack algorithm aimed at target recognition models.One of the key challenges with current adversarial attack methodologies is their limited ability to produce adversarial examples that can be consistently effective across different models. The generation of such universally effective adversarial samples is a significant hurdle. Nonetheless, achieving this transferability is essential for assessing and bolstering the resilience of AI models against potential security threats. Therefore,this paper introduces a novel adversarial attack algorithm called AdvGAN-G Attack, building on the research surrounding adversarial attack methods that utilize Adversarial Generative Networks (AdvGAN). By utilizing the AdvGAN adversarial training principle and combining the conversion of sample space domain and frequency domain, the gradient editing mechanism is used to optimize the generator gradient parameters in the AdvGAN model, thereby generating adversarial samples with high transferability. Finally, by comparing the performance of AdvGAN-G Attack with other adversarial attack algorithms with transferability, the advantages of AdvGAN-G Attack in terms of sample transferability and algorithm runtime cost were verified, providing an effective solution for improving model robustness and addressing adversarial attack challenges.**

***Index Terms*—Deep Neural Networks; Adversarial Attacks; Generating adversarial networks; Transferability**

I. Introduction

Due to the swift progress in big data analysis techniques and the computational capabilities of GPUs, the domain of artificial intelligence (AI), particularly the subset of deep learning, has gained considerable momentum within the realm of computer science. This subfield of AI has notably excelled in various sectors, including but not limited to, advancing the frontiers of computer vision [1], enhancing the accuracy of speech recognition [2], and refining the intricacies of natural language processing [3]. From AlphaGo's victory over world Go champion Lee Sedol in 2017, to the emergence of ChatGPT in November 2022, showcasing its universal language ability, capable of knowledge question-answering, mathematical reasoning, literary creation, code writing, data sorting, language translation, and role-playing, and in May 2023, SenseTime jointly released the all-round AI intelligent agent that mastered the game "Minecraft", demonstrating the ability of AI to autonomously learn, explore, and survive in complex environments. The breakthrough progress of deep learning has attracted the world's attention and has aroused widespread attention from global scholars. However, while deep learning technology is widely applied, it also faces challenges such as model dependency on specific domain data, high computing resource requirements, and the threat of adversarial samples.

In 2013, Szegedy et al. [4] pioneered the notion of adversarial attacks. Their research revealed that the output of deep convolutional neural networks could be significantly altered with minimal perturbations to the input images. These perturbations, though too subtle for human perception, were sufficient to entirely redirect the classifier's predictions made by the deep convolutional neural networks.Worse still, the attacked model has a high confidence in the incorrect prediction, and this process is called adversarial attack, and the sample with added perturbations is called adversarial sample. Furthermore, research has found that adversarial samples not only affect specific convolutional neural network models but also have a certain degree of transferability [5], i.e., they can attack other convolutional neural network models with a certain success rate under certain conditions, the attack method used by researchers to attack a specific convolutional neural network and generate adversarial samples can cause other convolutional neural networks to make incorrect classifications. Investigators refer to this form of assault as a transfer attack, typically employed to evaluate the robustness and transferability of deep convolutional neural networks. The attack success rate [6] stands as a key metric for gauging the efficacy of adversarial attack methodologies. It is defined as the proportion of adversarial instances that induce misclassifications by the deep convolutional neural network to the total number of instances correctly classified under standard conditions. A lower attack success rate indicates a more robust deep convolutional neural network, while a higher rate suggests vulnerability. Additionally, the transferability of adversarial samples is assessed using the attack success rate. By generating a set of adversarial samples with an adversarial attack algorithm targeted at a specific deep convolutional neural network and then deploying these samples against different network models, the transferability of the adversarial samples is quantified through the attack success rate. Consequently, the level of the attack success rate directly

Authorized licensed use limited to: Khon Kaen University provided by UniNet. Downloaded on March 10,2026 at 09:28:57 UTC from IEEE Xplore. Restrictions apply.

mirrors the transferability extent of the generated adversarial samples.

Investigations into adversarial attack methodologies play an indispensable role in fortifying the defense mechanisms of deep learning systems. [7]It not only helps understand the vulnerability of the model but also drives the development of adversarial defense technology. In the field of information security, adversarial attack technology can be used as an active defense measure to prevent adversarial elements from using deep learning technology for attacks. In the research of deep learning models, adversarial attack algorithms have promoted the discovery of model weaknesses and the proposal of adversarial defense algorithms, strengthening the model's robustness.

The current state of research in deep convolutional neural network technology involves many aspects, including model architecture, optimization algorithms, training strategies, transfer learning, model explanation, application expansion, and model compression. In terms of model architecture, researchers have proposed various network structures, such as CNN [8], RNN [9], and Transformer [10], to meet the needs of different tasks. Optimization algorithms such as Adam [11], Adagra [12], and Adadelta [13] have also been continuously improved to enhance the effectiveness of model training. In terms of training strategies, data augmentation, regularization techniques, and ensemble learning methods serve to bolster the model's capacity for generalization and its robustness. Transfer learning [14] accelerates model training and improves performance. Research on model explainability and interpretability enhances the trustworthiness of the model through methods such as LIME [15] and SHAP [16]. The application areas of deep convolutional neural network technology are constantly expanding, driving industry development and innovation. Model compression and lightweighting methods such as pruning, quantization, and distillation enable the model to adapt to resource-constrained environments.

The current state of research in adversarial attack technology includes research on the target selection and adversarial attack in different domains. In terms of target selection, researchers have explored target selection methods based on black-box attacks, gradient information, model characteristics, robustness evaluation, and transfer learning. At the same time, adversarial defense algorithms such as adversarial training and model compression have also been studied to strengthen the model's resilience..

Due to the existence of adversarial transferability, adversarial attacks are more threatening, and also make adversarial defense more difficult, therefore, adversarial transferability has a driving role in both the study of adversarial attacks and adversarial defense.

In this manuscript, we introduce a novel technique known as AdvGAN-G Attack, which is the result of our in-depth analysis of the dynamics within adversarial generative networks (AdvGANs). The adversarial sample generation mechanism within AdvGAN harnesses the discrete cosine transform (DCT) and the inverse discrete cosine transform (IDCT) to transition the adversarial samples from the generator into the frequency domain. This process is followed by a meticulous search for an optimal generator gradient update strategy to fine-tune the generator's parameters within the frequency domain. Subsequently, these frequency domain signals are translated back into the spatial domain, aiming to augment the adversarial attack success rate (ASR) and to ensure that the adversarial samples exhibit robust transferability across various models.

II. BACKGROUND

A. An Overview of Convolutional Neural Networks (CNN)

CNN are advanced deep learning models that draw inspiration from the human brain's neural processing. They are made up of layers of artificial neurons, each designed to receive input, apply transformations through weights and activation functions, and learn from data via backpropagation. A CNN features an input layer that matches the dimensionality of the input data, several hidden layers for feature extraction, and an output layer. The output layer's neuron count is tailored to the classification task, with each neuron representing a class. Hidden layers use convolutional and pooling operations to identify features like edges and textures, reducing spatial dimensions and computational load. This architecture enables CNNs to excel in image and speech recognition tasks by automatically learning hierarchical representations from input data.

B. Defending Against Attacks and Transferability

The challenge posed by adversarial attacks lies in their ability to generate adversarial samples through the introduction of minimal perturbations to original data, which can mislead models into producing incorrect outputs with high confidence levels. This phenomenon underscores the vulnerability of deep learning architectures when confronted with adversarial inputs.

The concept of transferability in adversarial attacks pertains to the capacity of these samples to effectively deceive various machine learning models. When exhibiting high transferability, adversarial samples can compromise multiple models beyond just the one they were originally crafted against. Transferable attacks maintain their efficacy across diverse models and contexts. Enhancing the transferability of such attacks is essential for assessing model robustness, safeguarding system security, and facilitating a comprehensive evaluation of model performance under varied attack conditions; it also aids in understanding attacker strategies and devising more effective defense mechanisms. Consequently, an in-depth exploration and comprehension of adversarial attack transferability are critical for addressing security threats and ensuring safe applications within artificial intelligence technologies.

C. Adversarial Sample Generation Techniques

The key to generating adversarially transferable samples lies in devising a method that effectively deceives multiple models. Generative Adversarial Networks (GANs) serve as a prevalent approach for achieving this objective, wherein the generator

Authorized licensed use limited to: Khon Kaen University provided by UniNet. Downloaded on March 10,2026 at 09:28:57 UTC from IEEE Xplore. Restrictions apply.

produces adversarial samples while the discriminator assesses their authenticity.By incorporating adversarial training, the generator hones its capacity to produce samples that are more sophisticatedly deceptive, which in turn bolsters the attack's transferability.

AdvGAN represents an adversarial assault strategy that leverages the framework of generative adversarial networks to produce adversarial samples. It functions through the concurrent training of both the generator and the discriminator. During the AdvGAN training regimen, the process oscillates between stabilizing the generator to train the discriminator and reversing the roles, continuing this pattern until a predetermined endpoint is reached. The primary aim of the generator is to produce realistic adversarial samples capable of misleading the discriminator, whereas the discriminator endeavors to enhance its classification accuracy for both real and generated samples. AdvGAN facilitates semi-white-box and black-box attacks with a high success rate, generating adversarial examples that can circumvent even state-of-the-art defenses without prior knowledge of existing countermeasures.

In recent years, frequency-domain adversarial attack techniques have garnered increasing attention from researchers. Compared to traditional spatial-domain methods, frequency-domain approaches exhibit superior resilience and robustness. These techniques leverage Fourier transforms to convert input samples into the frequency domain for modification before reverting them back into spatial form via inverse Fourier transforms. This strategy allows for subtle alterations of input samples while preserving semantic integrity. The advantage inherent in frequency-domain attacks lies in their capacity for implementing nuanced modifications more readily while maintaining semantic information—an aspect particularly effective across audio, image, and video multimedia domains.

III. A TRANSFER-BASED ADVERSARIAL ATTACK METHOD

A. The AdvGAN-G Attack method based on AdvGAN

Assuming the original samples are (x_i, y_i), where $x_i \in X$ and $y_i \in Y$. Here, $X \in \mathbb{R}^{W \times H \times C}$, with W representing the image width, H representing the image height, and C being the number of channels. Y is a set composed of N different labels. The target model $f : X \to Y$ in a typical classification task can usually correctly classify the samples. That is, for the input sample and its corresponding label y_i, the classification result can be defined as $y_i = f(x_i)$. For adversarial attacks, the goal is to manipulate the input sample by introducing imperceptible perturbations to deceive the network f, i.e., the adversarial sample is $x_{adv} = x + \delta$, where $\delta \in R^{W \times H \times C}$. At the same time, the model's classification result satisfies $f(x_{adv}) = \hat{y}$, where $\hat{y} \neq y_i$.

In GAN-based adversarial attack algorithms, the perturbation δ is typically generated by the generator G, as shown in Equations (1) and (2).

$$x_{\text{adv}} = x_i + G(x_i) \tag{1}$$

$$\|x_{\text{adv}} - x_i\|_p \leq \epsilon \tag{2}$$

where $\| \cdot \|_p$ denotes the L_p norm, and ϵ represents the maximum perturbation.

The L_p norm is defined as follows:

For an n-dimensional vector $x = (x_1, x_2, \ldots, x_n)$, the L_p norm is given by Equation (3):

$$\|x\|_p = \left(\sum_{i=1}^{n} |x_i|_p^{\frac{1}{p}} \right) \tag{3}$$

Here, p denotes a real-valued parameter, with p being no less than 1. Specifically, when p equals 1, this norm is identified as the L1 norm. At p equals 2, it is recognized as the L_2 norm. And for p equals infinity, it is termed the L_∞ norm.

The L_1 norm, also known as the Manhattan norm, is calculated as the aggregate of the absolute values of all components within the vector. In contrast, the L_2 norm, often referred to as the Euclidean norm, is determined by taking the square root of the accumulated squared values of the vector's elements. Lastly, the L_∞ norm, or maximum norm, is ascertained by identifying the most significant absolute value present in the vector.

1) DCT and IDCT: Ahmed et al. proposed a new digital processing technique, the DCT, which is a technique for converting one-dimensional or multidimensional signals into a frequency domain representation. DCT is extensively applied across various domains, notably in image processing. The main idea behind DCT is to represent a signal as a weighted combination of different frequency domain cosine functions, and through DCT, the signal can be decomposed into a set of basis functions that represent the signal's components in the frequency domain. In image processing, DCT facilitates the transformation of an image into a spectrum of frequency-based coefficients.

The IDCT is the inverse operation of DCT and is used to convert a frequency domain representation of a signal back to the spatial domain. Specifically, given a set of DCT coefficients, IDCT can reconstruct the original signal by weighted combination of these coefficients. In image processing, IDCT is responsible for reconstructing the original image from the DCT coefficients.

The IDCT is the inverse operation of DCT, used to convert signals represented in the frequency domain back to the spatial domain. Specifically, given a set of DCT coefficients, IDCT can reconstruct the original signal by combining these coefficients with appropriate weights. In image processing, IDCT is responsible for reconstructing the original image from DCT coefficients. The formulas for DCT and IDCT are given by Equations (4) and (5):

$$\text{DCT: } D(u,v) = \frac{1}{\sqrt{2N}} \sum_{x=0}^{N-1} \sum_{y=0}^{N-1} f(x,y) \cos\left(\frac{(2x+1)i\pi}{2N}\right) \cos\left(\frac{(2y+1)j\pi}{2N}\right) \tag{4}$$

$$\text{IDCT: } f(x,y) = \frac{1}{\sqrt{2N}} \sum_{u=0}^{N-1} \sum_{v=0}^{N-1} D(u,v) \cos\left(\frac{(2u+1)i\pi}{2N}\right) \cos\left(\frac{(2v+1)j\pi}{2N}\right) \tag{5}$$

For Equation (4): u and v represent the horizontal and vertical positions in the frequency domain, x and y represent

Authorized licensed use limited to: Khon Kaen University provided by UniNet. Downloaded on March 10,2026 at 09:28:57 UTC from IEEE Xplore. Restrictions apply.

the horizontal and vertical positions in the spatial domain, N represents the size of the image, and $D(u, v)$ represents the elements in the coefficient matrix after the Discrete Cosine Transform.

For Equation (5): u and v represent the horizontal and vertical positions in the frequency domain, x and y represent the horizontal and vertical positions in the spatial domain, N represents the size of the image, and $f(x, y)$ represents the grayscale value of the pixel (x, y) in the original image.

2) Gradient editing in the frequency domain: Decompose the loss function in GAN into three different components L^f_{adv}, L_{GAN}, and L_{hinge}, using α and β to adjust the weights of the three components.

L^f_{adv} represents the adversarial loss, which aims to make the generated samples as deceptive as possible to the discriminator.The objective of this loss is to minimize the disparity between samples produced by the generator and actual samples. L_{GAN} denotes the adversarial loss that exists between the generator and discriminator, aiming to motivate the generator to produce more authentic samples. This particular loss function is crafted to enhance the generator's performance by making it increasingly challenging for the discriminator to differentiate between real and generated samples. Conversely, L_{hinge} pertains to the discriminator's loss, often referred to as hinge loss, which aims to assist the discriminator in effectively distinguishing between real samples and those generated.

As stated earlier, in order to train the generator and discriminator independently, it is essential to first fix the generator while training the discriminator, and then fix the discriminator while training the generator.The specific parameter updates are shown in Equations (6) and (7):

$$W_G = W_G - \eta \left(\frac{\partial L^f_{\text{adv}}}{\partial W_G} + \alpha \frac{\partial L_{\text{GAN}}}{\partial W_G} + \beta \frac{\partial L_{\text{hinge}}}{\partial W_G} \right) \tag{6}$$

$$W_D = W_D - \eta \left(\frac{\partial L_{\text{GAN}}}{\partial W_D} \right) \tag{7}$$

Where, in order to obtain excellent adversarial samples, only the parameters of the generator need to be updated, and the parameters of the discriminator do not need to be updated. The adversarial loss part is: $-\eta \frac{\partial L^f_{\text{adv}}}{\partial W_G}$, the GAN loss part is: $-\eta\alpha \frac{\partial L_{\text{GAN}}}{\partial W_G}$, and the hinge loss part is: $-\eta\beta \frac{\partial L_{\text{hinge}}}{\partial W_G}$

By applying the chain rule and Equation (6), the gradient formula related to the generator can be obtained as shown in Equation (8):

$$\nabla_{W_G} L^f_{\text{adv}} = \frac{\partial L^f_{\text{adv}}}{\partial (x + G(x))} \cdot \frac{\partial (x + G(x))}{\partial G(x)} \cdot \frac{\partial G(x)}{\partial W_G} \tag{8}$$

The gradient update of the generator is shown in Equation (9):

$$W_G = W_G - \eta \left(\nabla_{W_G} L^f_{\text{adv}} + \alpha \frac{\partial L_{\text{GAN}}}{\partial W_G} + \beta \frac{\partial L_{\text{hinge}}}{\partial W_G} \right) \tag{9}$$

Where, $\frac{\partial (x+G(x))}{\partial G(x)} = 1$ is a constant, $\frac{\partial L^f_{\text{adv}}}{\partial (x+G(x))}$ represents the change of the adversarial sample relative to the loss function, i.e., the change of the adversarial sample is determined by it. $\frac{\partial G(x)}{\partial W_G}$ indicates the update process of the parameters in the generator and their impact on the adversarial sample.

$$\frac{\partial L^f_{\text{adv}}}{\partial (x + G(x))} = \frac{\partial L^f_{\text{adv}}}{\partial x} = \frac{\partial L^f_{\text{adv}}}{\partial W_G} \tag{10}$$

As shown in Equation (10), the generation of the adversarial sample is determined by the overall change of $x + G(x)$, the change of the sample x, and the change of the generator parameters $G(x)$.

3) Execution of the AdvGAN-G Attack: Based on the preceding discussion, we propose a frequency domain adversarial sample generation algorithm called AdvGAN-G Attack, illustrated in Figure 1. This algorithm is designed to boost the transferability of adversarial samples and enhance overall efficiency.

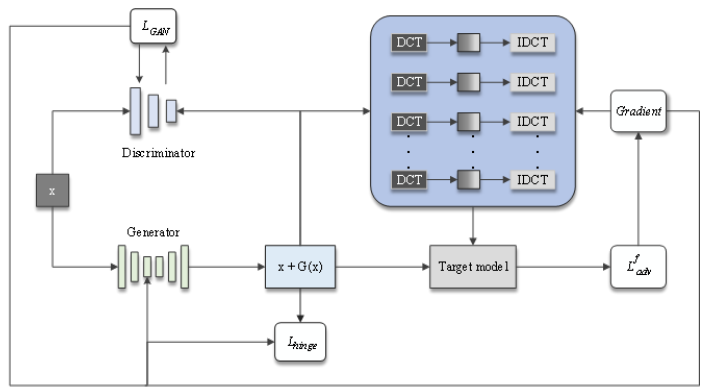

Fig. 1. The workflow of AdvGAN-G Attack algorithm

The core idea is to use GAN and introduce a new gradient editing mechanism by exploring the frequency domain information to determine the gradient direction, thus optimizing the parameter training process of the generator. The AdvGAN-G Attack algorithm is shown in Algorithm 1:

In this context, x, y symbolize the input data and their corresponding labels, respectively. The variable $k_{\max}$ denotes the upper limit of the iteration count, at which point the algorithm will stop, flag is used for the loop condition judgment of the algorithm, $\varepsilon, \tau, \sigma, \gamma$ are used to represent the initialization perturbation value, DCT transformation hyperparameter, frequency domain exploration amplitude, and error threshold (determining the disparity between the adversarial sample and the original input sample, if not greater than this threshold, it indicates that a sufficiently small perturbation has been found, and the algorithm stops).

The algorithm's detailed steps can be summarized as follows:

Firstly, extract samples from a zero-mean Gaussian distribution with a standard deviation of one to add an initialization perturbation ε that is the same shape as the input sample x.

Authorized licensed use limited to: Khon Kaen University provided by UniNet. Downloaded on March 10,2026 at 09:28:57 UTC from IEEE Xplore. Restrictions apply.

Algorithm 1 AdvGAN-G Attack Algorithm

Input: x, y
Parameters: $\sigma = 0.1, \tau = 0.01, \varepsilon = 0.01, k = 0, \text{flag} = \text{True}, \gamma$
Output: x_{adv}
while flag=True **do**
  $\varepsilon, \varepsilon \in N(0, I, x.shape)$
  $x_{adv} = x + \varepsilon + G(x)$
  $x_{dct} = DCT(x_{adv}, \tau)$
  $\varepsilon_{det}, \varepsilon_{det} \in N(1, \sigma)$
  $x_{det_{adv}} = x_{dct} * \varepsilon_{det}$
  $x_{new_{adv}} = IDCT(x_{dct_{adv}})$
  $k = k + 1$
  if $x_{new_{adv}} - x_{adv} \leq \gamma$ or $k = 1000$ **then**
    flag = False
    $x_{adv} = x_{new_{adv}}$
  else
    flag = True
    $x = x_{adv}$
  end if
end while
return x_{adv}

Secondly, add the input sample x to the initialization perturbation ε and the generator-generated $G(x)$ to obtain the adversarial sample x_{adv}. Then, use DCT to transform into the frequency domain, and obtaining specimen from a Gaussian distribution with an average of 1 and a standard deviation represented by σ to introduce a new random transformation for exploring different frequency domains.

Next, use IDCT to convert the sample obtained after the frequency domain exploration transformation back to the spatial domain, obtaining a new adversarial sample $x_{\text{new}_{\text{adv}}}$.

Lastly, make a judgment, if the threshold between the new adversarial sample $x_{\text{new}_{\text{adv}}}$ and the input sample x is less than γ, it indicates that the minimum perturbation for this loop has been found or the loop iteration number k has reached the threshold, stop the loop, that is, the final adversarial sample x_{adv} is obtained, otherwise continue the loop iteration to identify the most effective adversarial example x_{adv}.

The specific formula is shown in Equation (11):

$$x_{\text{adv}_i} = \text{IDCT}\left(\text{DCT}\left(x + G(x) + N(0, I) \cdot \frac{\varepsilon}{255}\right) \cdot N(1, \sigma)\right) \quad (11)$$

During the generator training process, the gradient formula is shown in Equation (12):

$$\text{Gradient} = -\operatorname{sign}\left(\frac{1}{N}\sum_{i=1}^{N}\frac{\partial\left(L\left(x_{\text{adv}_i}, y\right)\right)}{\partial x_{\text{adv}_i}}\right) \quad (12)$$

The loss function formula for the adversarial sample is shown in Equation (13):

$$L_{\text{adv}}^{f} = -\frac{1}{\text{Batch_size}}\operatorname{sum}\left([x + G(x)] \cdot \text{Gradient}\right) \quad (13)$$

Applying the above Equations (11), (12), and (13) to the following generator parameter update formula (14), through iterative training, an adversarial sample x_{adv} with high transferability can ultimately be obtained.

$$W_G = W_G - \eta\left(\frac{\partial L_{\text{adv}}^{f}}{\partial W_G} + \alpha\frac{\partial L_{\text{GAN}}}{\partial W_G} + \beta\frac{\partial L_{\text{hinge}}}{\partial W_G}\right) \quad (14)$$

B. Experiment and Evaluation

In this section, the feasibility and high transferability of the AdvGAN-G Attack algorithm are demonstrated by comparing the success rates of adversarial attacks on target models using generated adversarial samples from different source models using various other algorithms.

1) Experimental Setup:

- Data Set: We utilize the MNIST dataset, which is a collection of handwritten digit images that has been adapted from the original NIST database in the United States.
- The model: four commonly used models in image classification tasks, namely Inception-v3, Inception-v4, ResNet-50, and Inception-ResNet-v2, were used as the source models, and the performance of the AdvGAN-G Attack algorithm and other algorithms was compared on six different models.
  Among them, Inception-v3, Inception-v4, ResNet-50, and Inception-ResNet-v2 are four untrained models without any adversarial training, Inception-v3-ens2 is a collection model obtained by training two Inception-v3 models with adversarial training, and Inception-v3-ens3 is a collection model obtained by training three Inception-v3 models with adversarial training, which has better performance and higher robustness.
- attack algorithm for comparison:AdvGAN,MIM,NIM.
- The uniform learning rate is established at 0.001, complemented by a learning rate decay strategy throughout the training phase. The training duration is consistently set to encompass 100 epochs. λ_{adv} is configured to 10, and N is also set to 10. ε is defined as 16, α is assigned a value of 0.01, and β is given a value of 0.001.

2) Evaluation Indicators for the Experiment: In the experimental setup, the metric of Attack Success Rate (ASR) is employed to assess the efficacy of the algorithm. ASR denotes the ratio of instances within the dataset that are effectively manipulated to induce the target model into yielding incorrect predictions. An elevated ASR signifies a more potent attack strategy.The precise computational formula is depicted in Equation (15):

$$\text{ASR} = \frac{\text{Misleading target model samples}}{\text{Total dataset samples}} \quad (15)$$

The perturbation ratio (PR, Perturbation Ratio) is used to measure the degree of perturbation added to the input samples in the adversarial attack. A lower PR indicates that the adversarial sample is closer to the original image. The

Authorized licensed use limited to: Khon Kaen University provided by UniNet. Downloaded on March 10,2026 at 09:28:57 UTC from IEEE Xplore. Restrictions apply.

TABLE I
COMPARISON OF EXPERIMENTAL DATA

Source Model	Attack Algorithm	Inception-v3	Inception-v4	Inception-v3-ens2	Inception-v3-ens3	ResNet-50	Inception-ResNet-v2
Inception-v3	AdvGAN	92.3	88.6	48.8	48.8	80.3	26.9
	MIM	98.3	83.5	14.9	15.7	82.8	8.2
	NIM	97	83	49.5	50.4	84.7	31.5
	AdvGAN-G Attack	95.9	90.9	48.5	51.1	86.3	28.1
Inception-v4	AdvGAN	85.2	84.3	20.9	54.3	64.9	24.1
	MIM	88.2	95	17.7	20.3	40.4	9.7
	NIM	83.3	95.8	28.3	39.9	73.3	31.4
	AdvGAN-G Attack	88.4	99.9	39.3	61.3	76.6	28.8
ResNet-50	AdvGAN	54.2	38	16.1	24.9	78.6	12.4
	MIM	52.9	43.5	24.3	24.4	80.6	13.3
	NIM	54.7	43.5	23.2	38.2	82.3	34.4
	AdvGAN-G Attack	55	47.3	40.1	30.1	83.5	20.8
Inception-ResNet-v2	AdvGAN	77.8	73.9	16.1	24.9	84.3	32.4
	MIM	82.9	77.3	24.3	24.4	85.1	33.3
	NIM	74.7	83.5	59.1	31.5	87.6	36.1
	AdvGAN-G Attack	83.6	84.5	21.6	58.1	89.3	35.8

calculation formulas for the absolute perturbation ratio (APR) and the signal-to-noise ratio (SPR) are shown in equations (16) and (17):

$$\text{APR} = \frac{1}{N} \cdot \frac{\text{abs}(x_{\text{adv}} - x)}{W \cdot H \cdot C} \tag{16}$$

$$\text{SPR} = \frac{1}{N} \cdot \frac{(x_{\text{adv}} - x)^2}{W \cdot H \cdot C} \tag{17}$$

Here, N signifies the total count of samples encompassed by the dataset. The dimensions of the input data are characterized by $W \cdot H \cdot C$, which correspond to the image's height, width, and channel count, respectively.

3) The experimental results: In the specific experiments, we conducted a comparative analysis of the AdvGAN-G Attack algorithm alongside other transferable algorithms, namely AdvGAN, MIM, and NIM.

Regarding attack success rates, the AdvGAN-G Attack algorithm consistently demonstrated a high level of effectiveness across multiple source models and attack methodologies. When evaluated on six distinct models—Inception-v3, Inception-v4, Inception-v3-ens2, Inception-v3-ens3, ResNet-50, and Inception-ResNet-v2—the attack success rate of AdvGAN-G Attack was notably superior to that of traditional adversarial attack algorithms such as MIM and NIM.

Furthermore, in terms of adversarial sample transferability, the samples generated by the AdvGAN-G Attack algorithm exhibited significant transferability between different source and target models. In contrast, traditional adversarial attack methods like MIM and NIM displayed considerable variability in their attack success rates across different models. For instance, when applying the AdvGAN-G Attack algorithm to generate adversarial samples from an Inception-v3 source model, we observed consistently high success rates on other source models. Conversely, when using the MIM algorithm with samples generated from an Inception-v3 model, there was substantial fluctuation in success rates across various other models. This indicates that the adversarial samples produced by our proposed method possess strong generalization capabilities and enhanced transferability.

In conclusion, regarding performance metrics, the AdvGAN-G Attack algorithm exhibits a relatively stable success rate in attacks when compared to other attack strategies under various source models. Despite minor oscillations, the overall effectiveness of the AdvGAN-G Attack in generating adversarial samples that achieve high attack success rates is maintained, highlighting its stable performance. The comprehensive experimental results are presented in Table I.

The analysis of Tables I reveals that, in certain instances, the attack success rate of AdvGAN-G Attack is comparatively lower than that of other algorithms. This discrepancy may arise due to a multitude of factors, such as the different characteristics of adversarial samples, differences in model adaptability, hyperparameter settings, and robustness of adversarial samples. First, it may be caused by the different characteristics of adversarial samples. Different adversarial attack algorithms may generate adversarial samples with different characteristics. In some cases, other algorithms may have generated more deceptive adversarial samples, resulting in a relatively higher attack success rate. Second, it may be due to differences in model adaptability. Different adversarial attack algorithms may have different adaptability to different types of models. Some algorithms may perform better on certain types of models, resulting in a higher attack success rate. At the same time, hyperparameter settings also affect the results. In some cases, other algorithms may optimize their attack success rate by adjusting different hyperparameter settings, making them perform better in specific situations. In addition, the robustness of adversarial samples also affects the results, some adversarial attack algorithms may generate more robust adversarial samples, making them achieve a superior rate of attack success on different models.

Table II shows that the AdvGAN-G Attack algorithm achieves better attack results at a lower perturbation rate PR

Authorized licensed use limited to: Khon Kaen University provided by UniNet. Downloaded on March 10,2026 at 09:28:57 UTC from IEEE Xplore. Restrictions apply.

TABLE II
COMPARISON OF ADVGAN AND ADVGAN-G ATTACK ALGORITHMS

Source Model	Attack Algorithm	SPR	APR	Average ASR
Inception-v3	AdvGAN	240.0	15.2	62.5
	AdvGAN-G Attack	212.1	13.9	69.8
Inception-v4	AdvGAN	241.7	15.3	64.7
	AdvGAN-G Attack	210.2	13.8	72.5
ResNet-50	AdvGAN	242.5	15.3	40.7
	AdvGAN-G Attack	210.8	13.8	66.8
Inception-ResNet-v2	AdvGAN	235.0	15.0	77.5
	AdvGAN-G Attack	213.6	14.0	86.9

compared to the AdvGAN algorithm.

C. Summary

Due to the importance of improving the transferability of adversarial attacks, a new attack algorithm, AdvGAN-G Attack, was proposed by studying the AdvGAN method. During the update of the generator's parameters, DCT and IDCT were employed to confine the parameter adjustment process to the frequency domain of the sample. Subsequently, the gradient in this frequency domain was modified and updated, resulting in adversarial samples that exhibit high transferability. The corresponding experimental results were assessed and analyzed.

REFERENCES

[1] Hu J, Shen L, Albanie S, et al. Squeeze-and-Excitation Networks[J]. Ieee Transactions on Pattern Analysis and Machine Intelligence, 2020.

[2] Shan C, Zhang J, Wang Y, et al. Attention-Based End-to-End Speech Recognition on Voice Search[C]. IEEE International Conference on Acoustics, Speech and Signal Processing, 2018: 4764-4768.

[3] Gehring J, Auil M, Grangier D, et al. Convolutional Sequence to Sequence Learning[C]. 34th International Conference on Machine Learning, 2017.

[4] Szegedy C, Zaremba W, Sutskever I, et al. Intriguing properties of neural networks[J]. ArXiv , 2013.

[5] Liu Y, Chen X, Liu C, et al. Delving into Transferable Adversarial Examples and Black-box Attacks[J]. Arxiv, 2017.

[6] Li X, Cui W, Huang J, et al. REGULARIZED INTERMEDIATE LAYERS ATTACK: ADVERSARIAL EXAMPLES WITH HIGH TRANSFERABILITY[C]. IEEE International Conference on Image Processing , 2021.

[7] Huang L, Joseph A D, Nelson B, et al. Adversarial machine learning[C]. Proceedings of the 4th ACM workshop on Security and artificial intelligence, 2011.

[8] Lecun Y, Bottou L, Bengio Y, et al. Gradient-based learning applied to document recognition[J]. Proceedings of the IEEE, 1998.

[9] Graves A, Graves A. Long short-term memory[J]. Supervised sequence labelling with recurrent neural networks, 2012.

[10] Vaswani A, Shazeer N, Parmar N, et al. Attention is all you need[J]. Advances in neural information processing systems, 2017.

[11] Kingma D P, Ba J. Adam: A method for stochastic optimization[J]. ArXiv, 2014.

[12] Duchi J, Hazan E, Singer Y. Adaptive subgradient methods for online learning and stochastic optimization[J]. Journal of machine learning research, 2011.

[13] Zeiler M D. Adadelta: an adaptive learning rate method[J]. arXiv preprint ArXiv:2012.

[14] Pan S J, Yang Q. A survey on transfer learning[J]. IEEE Transactions on knowledge and data engineering, 2009.

[15] Ribeiro M T, Singh S, Guestrin C. " Why should i trust you?" Explaining the predictions of any classifier[C]. Proceedings of the 22nd ACM SIGKDD international conference on knowledge discovery and data mining, 2016.

[16] Lundberg S M, Lee S-I. A unified approach to interpreting model predictions[J]. Advances in neural information processing systems, 2017, 30.

Authorized licensed use limited to: Khon Kaen University provided by UniNet. Downloaded on March 10,2026 at 09:28:57 UTC from IEEE Xplore. Restrictions apply.