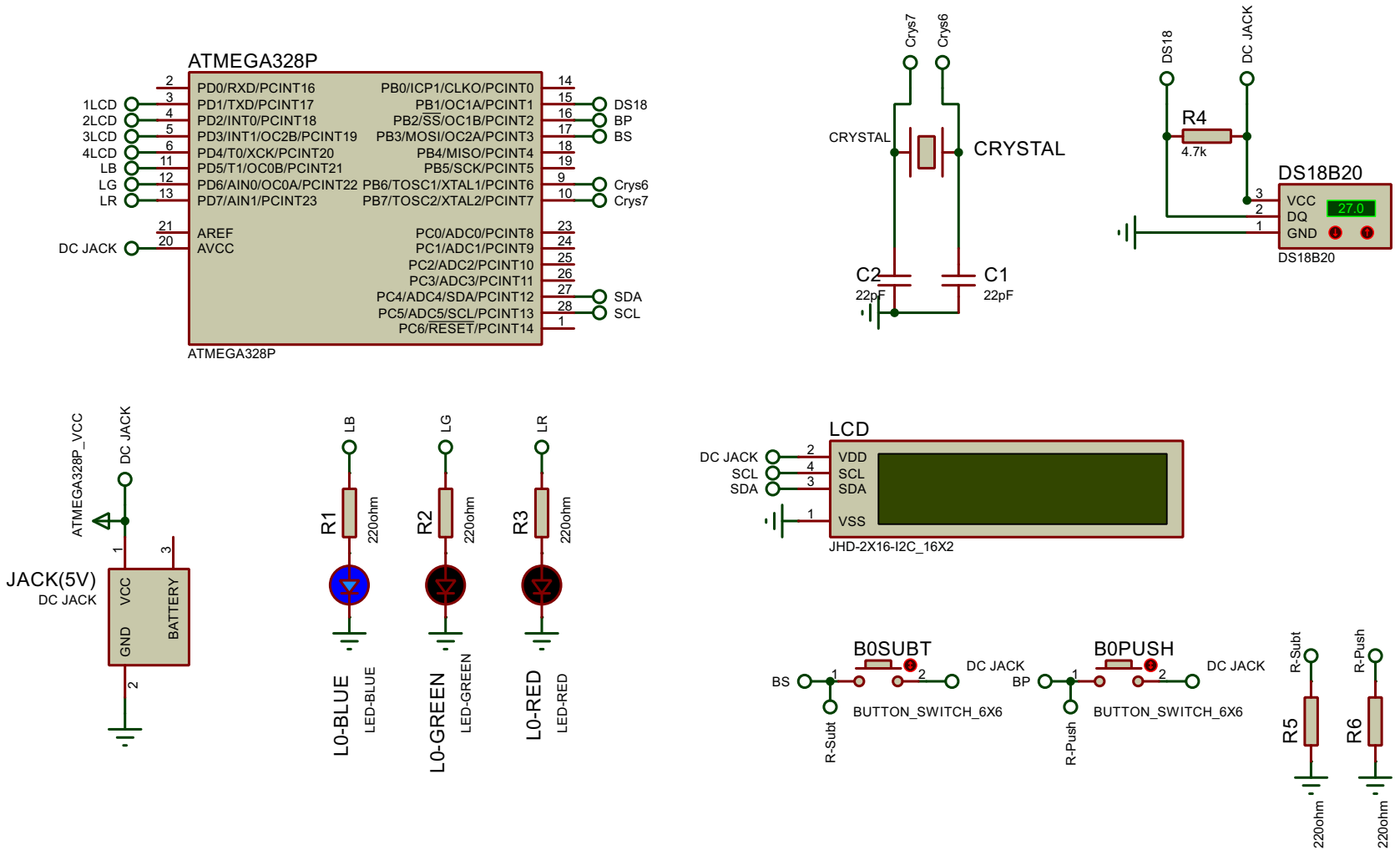
ATMEGA328P
PD0/RXD/PCINT16
PD1/TXD/PCINT17
PD2/INT0/PCINT18
PD3/INT1/OC2B/PCINT19
PD4/T0/XCK/PCINT20
PD5/T1/OC0B/PCINT21
PD6/AIN0/OC0A/PCINT22
PD7/AIN1/PCINT23
AREF
AVCC
PB0/ICP1/CLKO/PCINT0
PB1/OC1A/PCINT1
PB2/SS/OC1B/PCINT2
PB3/MOSI/OC2A/PCINT3
PB4/MISO/PCINT4
PB5/SCK/PCINT5
PB6/TOSC1/XTAL1/PCINT6
PB7/TOSC2/XTAL2/PCINT7
PC0/ADC0/PCINT8
PC1/ADC1/PCINT9
PC2/ADC2/PCINT10
PC3/ADC3/PCINT11
PC4/ADC4/SDA/PCINT12
PC5/ADC5/SCL/PCINT13
PC6/RESET/PCINT14
1LCD
2LCD
3LCD
4LCD
LB
LG
LR
DC JACK
DS18
BP
BS
Crys6
Crys7
SDA
SCL
ATMEGA328P
Crys7
Crys6
CRYSTAL
CRYSTAL
C2
22pF
C1
22pF
DS18
DC JACK
R4
4.7k
DS18B20
VCC
DQ
GND
27.0
DS18B20
ATMEGA328P_VCC
DC JACK
JACK(5V)
DC JACK
VCC
GND
BATTERY
LB
LG
LR
R1
220ohm
R2
220ohm
R3
220ohm
L0-BLUE
LED-BLUE
L0-GREEN
LED-GREEN
L0-RED
LED-RED
LCD
DC JACK
SCL
SDA
VDD
SCL
SDA
VSS
JHD-2X16-I2C_16X2
B0SUBT
BS
DC JACK
BUTTON_SWITCH_6X6
R-Subt
B0PUSH
BP
DC JACK
BUTTON_SWITCH_6X6
R-Push
R-Subt
R5
220ohm
R-Push
R6
220ohm