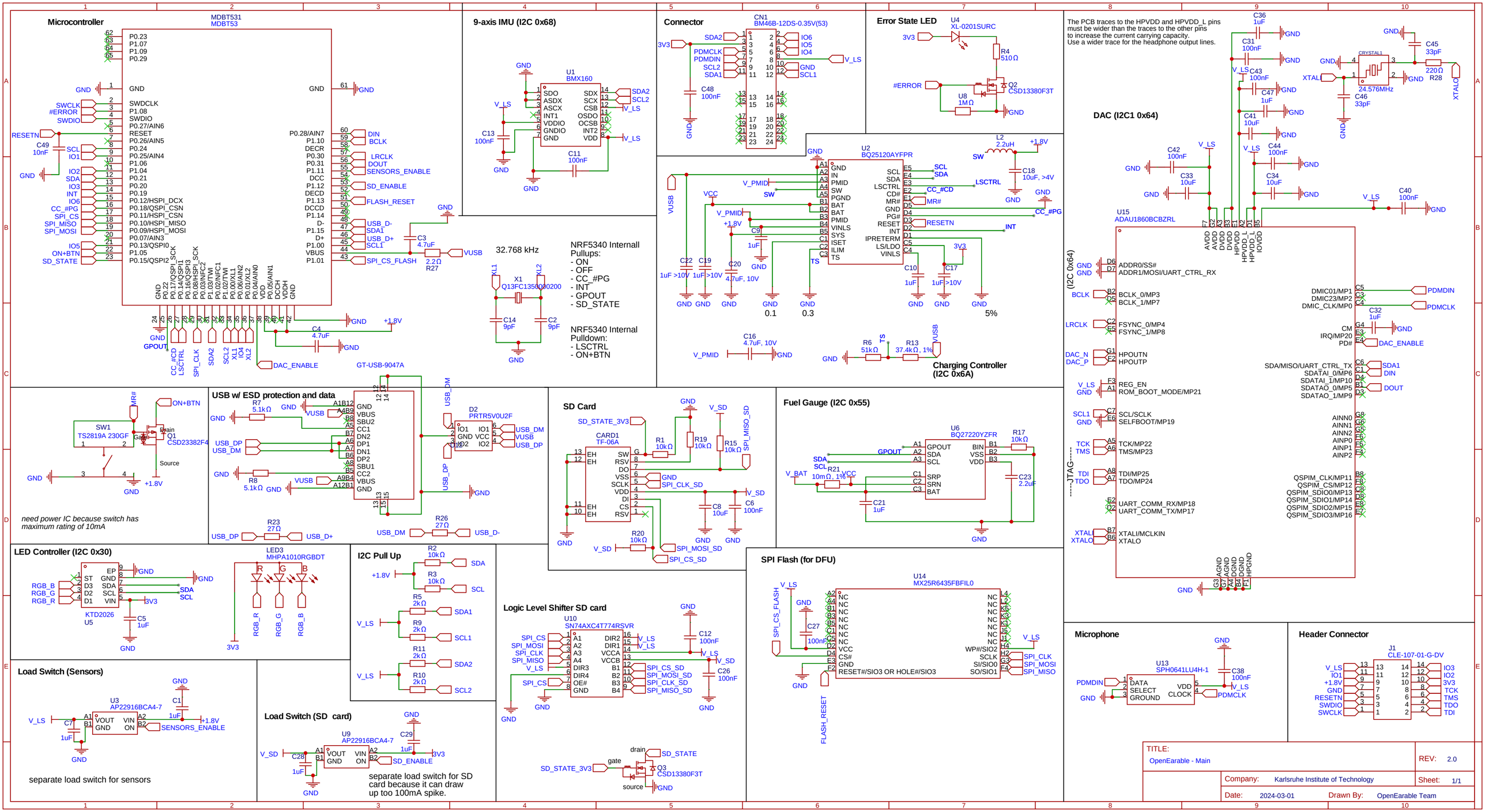
Microcontroller
MDBT531
MDBT53
9-axis IMU (I2C 0x68)
U1
BMX160
Connector
CN1
BM46B-12DS-0.35V(53)
Error State LED
U4
XL-0201SURC
R4
510Ω
Q2
CSD13380F3T
U8
1MΩ
The PCB traces to the HPVDD and HPVDD_L pins must be wider than the traces to the other pins to increase the current carrying capacity.
Use a wider trace for the headphone output lines.
DAC (I2C1 0x64)
U15
ADAU1860BCBZRL
U2
BQ25120AYFPR
Charging Controller
(I2C 0x6A)
32.768 kHz
X1
Q13FC1350000200
NRF5340 Internall Pullups:
- ON
- OFF
- CC_#PG
- INT
- GPOUT
- SD_STATE
NRF5340 Internal Pulldown:
- LSCTRL
- ON+BTN
GT-USB-9047A
SW1
TS2819A 230GF
Q1
CSD23382F4
need power IC because switch has maximum rating of 10mA
USB w/ ESD protection and data
D2
PRTR5V0U2F
SD Card
CARD1
TF-06A
Fuel Gauge (I2C 0x55)
U6
BQ27220YZFR
LED Controller (I2C 0x30)
KTD2026
U5
LED3
MHPA1010RGBDT
I2C Pull Up
Logic Level Shifter SD card
U10
SN74AXC4T774RSVR
SPI Flash (for DFU)
U14
MX25R6435FBFIL0
Load Switch (Sensors)
U3
AP22916BCA4-7
separate load switch for sensors
Load Switch (SD card)
U9
AP22916BCA4-7
separate load switch for SD card because it can draw up too 100mA spike.
Microphone
U13
SPH0641LU4H-1
Header Connector
J1
CLE-107-01-G-DV
TITLE:
OpenEarable - Main
REV: 2.0
Company: Karlsruhe Institute of Technology
Sheet: 1/1
Date: 2024-03-01
Drawn By: OpenEarable Team