Universität Hamburg
DER FORSCHUNG | DER LEHRE | DER BILDUNG

ClimateSAM: Adapting Foundation Models for Detecting Tropical Cyclones and Atmospheric Rivers in ClimateNet

Expose: Master thesis
at Computer Vision Group
Dr. Christian Wilms

Department of Informatics
MIN-Faculty
Universität Hamburg

submitted by
Thang Le Phuoc
Course of study: Msc. Informatik
Matrikelnr.: 7315507
on

Examiners: Dr. Christian Wilms

Abstract

Accurate detection of atmospheric features such as tropical cyclones (TCs) and atmospheric rivers (ARs) is critical for understanding and predicting weather patterns. While traditional rule-based systems have been widely used, recent advancements in deep learning offer opportunities for improved detection accuracy. This thesis investigates the adaptation of foundation models, specifically the Segment Anything Model (SAM), to atmospheric data from the ClimateNet dataset. SAM, originally designed for RGB image segmentation, is modified to handle multi-parameter atmospheric grids by incorporating a Variational Autoencoder (VAE) before the image encoder and introducing adapters in the mask decoder. The study evaluates these methods in detecting TCs and ARs, comparing their performance to existing models. Results demonstrate the potential of foundation models in meteorological applications, while addressing challenges in data representation and adaptation.

Zusammenfassung

Die präzise Erkennung atmosphärischer Merkmale wie tropischer Wirbelstürme (TCs) und atmosphärischer Flüsse (ARs) ist entscheidend für das Verständnis und die Vorhersage von Wettermustern. Während traditionelle regelbasierte Systeme weit verbreitet sind, bieten jüngste Fortschritte im Bereich des Deep Learning neue Möglichkeiten zur Verbesserung der Erkennungsgenauigkeit. Diese Arbeit untersucht die Anpassung von Foundation-Modellen, insbesondere des Segment Anything Model (SAM), an atmosphärische Daten aus dem ClimateNet-Datensatz. SAM, ursprünglich für die Segmentierung von RGB-Bildern entwickelt, wird modifiziert, um mit mehrdimensionalen atmosphärischen Gittern zu arbeiten, indem ein Variational Autoencoder (VAE) vor dem Bild-Encoder integriert und Adapter im Masken-Decoder hinzugefügt werden. Die Studie bewertet diese Methoden zur Erkennung von TCs und ARs und vergleicht ihre Leistung mit bestehenden Modellen. Die Ergebnisse zeigen das Potenzial von Foundation-Modellen für meteorologische Anwendungen auf und heben gleichzeitig Herausforderungen bei der Datenrepräsentation und Anpassung hervor.

Contents

Chapter 1

Introduction

The accurate identification and monitoring of extreme weather events, such as tropical cyclones (TCs) and atmospheric rivers (ARs), are vital for modern meteorology [?, ?, ?, ?, ?, ?]. These phenomena significantly impact global weather patterns, and their precise detection is a cornerstone for improving forecasting accuracy and understanding climate dynamics. While traditional detection methods have relied on rule-based systems using physical heuristics—such as sea-level pressure minima for TCs or specific moisture thresholds for ARs—these approaches often struggle with consistency and universal formulation [?, ?, ?, ?].

Recent advancements in deep learning, particularly convolutional neural networks like U-Net and CGNet, have transformed these detection tasks into semantic segmentation problems. These models have demonstrated an ability to learn physically plausible, complex atmospheric patterns that are difficult to define through rigid mathematical rules alone [?, ?]. However, as the field moves toward more robust and versatile architectures, the use of foundation models to further enhance detection capabilities still have significant research gaps.

1.0.1 Adapting SAM to the Climate Domain

The Segment Anything Model (SAM) has emerged as a powerful tool in computer vision due to its remarkable zero-shot generalization. Despite its success with natural images, applying SAM to meteorological data presents several unique challenges:

- Data Dimensionality and Representation: SAM is natively designed for three-channel RGB inputs. In contrast, the ClimateNet dataset consists of 16-channel atmospheric grids, including variables like zonal wind, surface temperature, and precipitable water. These variables lack the high-frequency edges and clear semantic boundaries found in natural imagery, necessitating specialized adaptation of the image encoder.

- Transition from Binary to Multiclass Segmentation: By design, SAM is a prompt-driven binary segmentation model that distinguishes a foreground object from the background based on a user-provided prompt. To make it

suitable for climate science, the architecture must be modified to handle multiclass semantic segmentation, enabling the simultaneous and distinct detection of TCs and ARs within a single global raster.

- Autonomous Prompt Generation: SAM's reliance on manual geometric prompts is a significant bottleneck for real-time weather forecasting. To make the system operationally viable, it must transition toward a prompt-free architecture. This requires the development of internal mechanisms—such as multi-scale fusion or auxiliary prediction networks—to automatically generate the guidance previously provided by humans.

1.0.2 Aim of the Thesis

The primary objective of this thesis is to develop ClimateSAM, a framework that adapts the Segment Anything Model for the automated, multiclass detection of atmospheric features in the ClimateNet dataset. This research aims to bridge the gap between foundation models and climate science by investigating parameter-efficient fine-tuning (PEFT) techniques, such as Low-Rank Adaptation (LoRA) and learnable token-based adapters, to refine SAM's encoder for non-RGB atmospheric data. Furthermore, the study explores the integration of automated prompt generators to eliminate the need for manual intervention, thereby creating a scalable pipeline for identifying extreme weather events. Ultimately, this work seeks to evaluate whether such an adapted foundation model can capture the unique morphological structures of tropical cyclones and atmospheric rivers more effectively than existing baselines.

Chapter 2

Background

2.1 Related work

This section reviews existing research on ClimateNet, focusing on prior attempts to implement automated detection for atmospheric features. We further examine current literature on Parameter-Efficient Fine-Tuning (PEFT) techniques, which are used to adapt large-scale foundation models for specific downstream tasks. Additionally, we discuss recent advancements in SAM adaptation, particularly focusing on methods that aim to transition SAM toward a prompt-free architecture for automated segmentation

2.1.1 Automated detection of atmospheric features

Traditional atmospheric feature detection relies on rule-based algorithms that use physical and mathematical heuristics, such as identifying Tropical Cyclones through minima or maxima in sea level pressure [**?**, **?**]. Atmospheric fronts are typically identified using derivatives of thermal variables and threshold-based filters, while Atmospheric Rivers are detected based on specific moisture thresholding and geometric requirements[**?**, **?**]. However, these rule-based systems are often inconsistent across different studies and can be difficult to formulate into a universal set of physical parameters.

Recent research demonstrates that supervised learning with convolutional neural networks, such as U-Net and CG-Net, can learn these detection tasks as semantic segmentation problems [**?**, **?**]. Using the ClimateNet dataset, these models achieve performance comparable to human experts by classifying grid points into background, TC, or AR classes [**?**, **?**]. Using CNNs for feature detection via semantic segmentation offers several key advantages, including significantly increased computational performance [**?**, **?**, **?**]. Furthermore, CNNs provide the unique capability to learn complex atmospheric patterns that are otherwise difficult to explicitly formulate as a rigid set of physical or mathematical rules [**?**, **?**, **?**].

Findings using Layer-wise Relevance Propagation (LRP) confirm that these CNNs learn physically plausible patterns; for TCs, the models prioritize point-shaped extrema in total precipitable water and circular wind motion, while for

ARs, they focus on elongated bands of high humidity and eastward winds. Additionally, studies show that while z-score normalization can cause an "ignorant-to-zero-input" issue in explainability maps, shifting the data ensures the models correctly utilize information across the entire input range to inform their spatial decisions [**?**].

2.1.2 Parameter-Efficient Tuning

Parameter-efficient tuning for foundation models has gained significant importance as a means to address the challenges of massive model scales and the inefficiency of maintaining unique versions for every task. Typically, the backbone parameters, such as the Vision Transformer in SAM, remain frozen, while a small set of auxiliary trainable weights is introduced and adapted to the specific task.

One way to implement these lightweight parameters is prompt tuning, which involves adding learnable tokens to the input sequence at various transformer layers to act as instructions that steer the frozen model. For instance, Visual Prompt Tuning introduces a small number of trainable parameters into the input space[**?**], demonstrating that tuning less than 1% of the model can outperform full fine-tuning. Similarly, MaPLe expands this by learning separate prompts across different stages of both vision and language branches to progressively model stage-wise feature relationships[**?**], while Context Optimization models context words as learnable continuous vectors to adapt models like CLIP for downstream recognition [**?**].

Another effective approach to perform for lightweight fine-tuning is by the integration of learnable sub-networks directly into the transformer modules. These adapters typically consist of small bottleneck layers that learn task-specific refinements without modifying the original weights. For example, CLIP-Adapter employs two-layer MLP modules to fine-tune high-level features of frozen vision-language models [**?**]. Residual adapters offer a parallel approach by adding tunable residual modules that steer a frozen network toward diverse visual domains[**?**]. More specialized modules include Explicit Visual Prompting, which introduces a tuner focusing on high-frequency components to segment low-level structures[**?**], and the Side Adapter Network (SAN), which attaches a lightweight side network to predict mask proposals for open-vocabulary tasks[**?**]. While these methods introduce additional architectural components alongside the frozen backbone, a distinct category of parameter-efficient tuning focuses on the mathematical re-parameterization of the weight updates themselves. This approach is exemplified by low-rank adaptation techniques, which modify the internal dynamics of the model without increasing its depth or inference latency.

LoRA

The development of Low-Rank Adaptation (LoRA) addresses the computational challenges of fine-tuning large-scale foundation models by assuming that task-specific weight updates possess a low intrinsic rank. Instead of updating the entire

pre-trained weight matrix $W_0 \in \mathbb{R}^{d\times k}$, LoRA represents the update ΔW as a product of two lower-rank matrices $B \in \mathbb{R}^{d\times r}$ and $A \in \mathbb{R}^{r\times k}$, where $r \ll \min(d, k)$. During training, the original backbone weights remain frozen, and only these low-rank decomposition matrices are updated, which drastically reduces the number of trainable parameters. This strategy has been proven effective in various domains, such as the MeLo framework for medical diagnosis, which achieved competitive results using only 0.17% of the original parameters [**?**]. Recent adaptations of SAM have successfully utilized LoRA to bridge the domain gap between natural and specialized datasets, such as medical or atmospheric imagery, while preventing catastrophic forgetting [**?**, **?**].

Conditional joint tuning strategy

Because SAM has in propotionally small mask decoder compared to its heavyweight image encoder. Previous studies often focused on tuning only a single backbone or dual-encoder systems (like CLIP). Because SAM's complexity is lopsided, with a huge encoder and a tiny decoder, simply adding prompts or adapters to one part might not effectively bridge the gap for specialized data. To address these structural challenges, recent frameworks like HQ-SAM [**?**] and CAT-SAM [**?**] employ a conditional joint tuning strategy that prioritizes the relationship between the encoder and decoder. HQ-SAM (High-Quality SAM) first addresses the limitation of coarse mask generation by introducing a small learnable "HQ-Output" token into the mask decoder. This token incorporates global image context and latent mask information, which is then combined with the original embeddings to facilitate high-quality mask generation for complex, domain-specific structures. Building upon this concept of decoder-based refinement, CAT-SAM introduces a prompt bridge structure to facilitate decoder-conditioned joint tuning. This mechanism explicitly maps domain-specific features from the mask decoder back into the heavyweight image encoder, fostering a synergy that allows both components to adapt together in a data-efficient manner.

2.1.3 Prompt Generator for SAM

To help SAM work without someone manually clicking or drawing boxes, research has shifted toward making the model prompt-free. While the original Segment Anything Model (SAM) generalizes incredibly well, its biggest drawback is that it requires a human to provide geometric prompts like points or boxes to get a result. This manual requirement is a major bottleneck for real-time tasks like weather forecasting, industrial automation, or medical imaging, where you might need to segment thousands of objects instantly. While vanilla SAM attempts "unintelligent automation" through dense grid searches [**?**], this method often misses small objects or generates redundant masks, slowing down processing. Alternative approaches utilize another off-the-shelf detection models like YOLOv8 to generate auxiliary masks, but these external, heavyweight architectures introduce significant computational overhead and lack tight alignment with SAM's internal features [**?**].

More sophisticated strategies focus on self-prompting and iterative refinement, where SAM generates its own guidance. For instance, SAM-SP uses initial vanilla predictions to create bounding boxes for subsequent refinement [**?**], while Self-Prompt SAM integrates a multi-scale prompt generator (MSPGenerator) with the image encoder to predict auxiliary masks[**?**]. These masks are further processed via Euclidean distance transforms to extract optimal, centralized points and boxes as prompts. To integrate automation natively, lightweight prediction networks like those in AoP-SAM operate directly on image embeddings to produce confidence maps, utilizing adaptive sampling and filtering to eliminate redundant prompts [**?**]. Similarly, UN-SAM fuses multi-scale embeddings to predict high-confidence foreground regions, while the SAN (Segment Any Nuclei) framework learns spatial priors of cell nuclei to automatically generate the thousands of prompts needed for medical imaging[**?**].

Finally, for highly specialized domains, automated prompting is enhanced by integrating expert knowledge or domain-adaptive mechanisms. PG-SAM leverages clinical diagnostic reports encoded through Vision-Language Models to create adaptive text embeddings that pinpoint high-morbidity regions for precise spatial prompting [**?**]. Meanwhile, DAPSAM addresses domain shifts by using a prototype-based generator powered by a parameterized memory bank [**?**]. By matching instance-level prototypes from target embeddings against stored source-domain knowledge, the system yields robust, domain-adaptive prompts that autonomously guide SAM's mask decoder.

2.2 ClimateNet Dataset

Variable	Description	Mean	Standard Dev.	Units
U850	Zonal wind at 850 mbar pressure surface	1.56	8.29	m/s
V850	Meridional wind at 850 mbar pressure surface	0.270	6.22	m/s
UBOT	Lowest level zonal wind	0.129	6.65	m/s
VBOT	Lowest model level meridional wind	0.332	5.77	m/s
TS	Surface temperature (radiative)	271	23.7	K
T200	Temperature at 200 mbar pressure surface	213	7.99	K
T500	Temperature at 500 mbar pressure surface	253	12.8	K
TREFHT	Reference height temperature	279	22.5	K
TMQ	Total (vertically integrated) precipitable water	19.3	15.8	kg/m^2
QREFHT	Reference height humidity	7.83×10^{-3}	6.20×10^{-3}	kg/kg
PRECT	Total (convective and large-scale) precipitation rate (liq + ice)	2.95×10^{-8}	1.56×10^{-7}	m/s
ZBOT	Lowest model level height	61.3	4.91	m
Z200	Geopotential Z at 200 mbar pressure surface	11.7×10^3	0.635×10^3	m
Z1000	Geopotential Z at 1000 mbar pressure surface	474	833	m
PS	Surface pressure	96.6×10^3	9.71×10^3	Pa
PSL	Sea level pressure	101×10^3	1.46×10^3	Pa

*Table 2.1: Atmospheric variables contained in the ClimateNet dataset [**?**, **?**].*

ClimateNet is a community-sourced, expert-labeled open dataset designed to bridge the gap between deep learning and climate science. It was developed to

address the lack of high-quality, labeled data for training machine learning models to identify and track extreme weather events. Traditionally, climate scientists used heuristics to identify storms. These rules are often inconsistent. ClimateNet provides ground-truth labels created by human experts, allowing researchers to train segmentation models. The ClimateNet dataset consists of 16 atmospheric variable channels and 1 label channel, provided as global rasters with size of 1152x768. Each pixel has either 0 (background), 1 (part of a TC), or 2 (part of an AR).The dataset is split into **398 training samples and 61 validation samples**. The table **??** describes the 16 variables with their means, standard deviation and units. While the dataset contains 16 channels, most baseline models (CGNet, DeepLabv3+) prioritize a subset of four variables because they are the most diagnostic for TC and AR: TMQ, u850, V850, and PSL.

2.2.1 Dataset Statistics

The Figure **??** describes the class distribution of the dataset with the percentage of TCs, ARs, and background. It is clear to see that the TC and AR classes are extremely smaller than the background, with TCs representing only 0.5% of the total pixels on average[cite: 132]. Specifically, the training set contains 93.9% background, 5.7% AR, and 0.5% TC pixels, while the validation set shows a nearly identical distribution of 93.9% background, 5.6% AR, and 0.5% TC pixels.

Due to natural atmospheric characteristics, there are fewer TC labels in comparison to AR labels. Specifically, there is an average of 7.4 AR masks per image, while there are only 2.6 TC masks in the same data point. It is also worth noting that these weather phenomena represent a very small proportion of the total area compared to the background. The average ratio per data point of background (0) to AR (2) is 17, and the ratio of background to TC (1) is 257. The Table **??** describes these statistics.

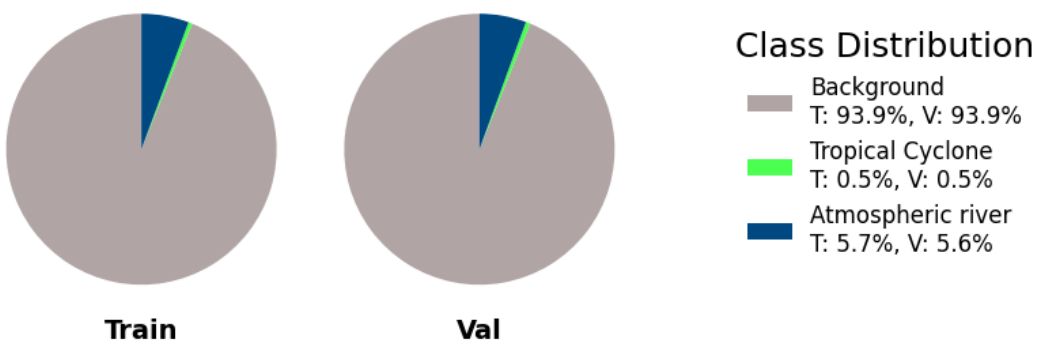

Figure 2.1: Class Distribution

Type	Statistic	#Masks per Data Point	Background/ Object Per Mask	Background/ Object per Data Point
AR	Mean	7.4	351.4	2,242
	Median	7.0	142.2	17
TC	Mean	2.6	880.7	149,220
	Median	2.0	685.4	257

Table 2.2: Class Proportion and Object Statistics

2.2.2 Geographical Features and Constraint

TCs are characterized by a distinct circular structure. Due to the lack of sufficient Coriolis force near the equator, these systems do not typically form within 5° of latitude. Instead, the vast majority of TCs originate within the latitudinal bands between 5° and 30° in both the Northern and Southern Hemispheres [**?**, **?**]. Explainability analysis (LRP) confirms that CNNs indeed learn to look at point-shaped extrema in TMQ and circular wind motion to identify TCs [**?**].

ARs has narrow corridors or "ribbons" forms. These phenomena occur in both the Northern and Southern Hemispheres and are most commonly found in the mid-latitudes, typically between 30° and 60° [**?**]. For AR detection, the models focus on elongated bands of high TMQ and eastward winds, which is physically plausible as ARs in both hemispheres are characterized by mid-latitude eastward moisture transport [**?**].

Consequently, when treating ClimateNet data points as spatial compositions, the geographic and geometric orientation of the corresponding labels is of critical importance. Because the formation of TCs and ARs are strictly governed by latitudinal physical constraints, the spatial context of these features is non-arbitrary. Therefore, standard geometric augmentation methods (e.g., vertical flipping or random rotations) should be avoided to ensure the model correctly learns the underlying geophysical semantics. Figure **??** illustrates four examples of data points from the ClimateNet dataset. As seen in these visualizations, the occurrence of these phenomena is variable; in some cases, TCs are not present within the provided time step, reflecting the natural distribution of extreme weather events.

2.3 Segment Anything Model

SAM is a 2D guided model that requires a geometric prompt (or user prompt) to segment an image. The output is a set of segmentation masks at different levels and a confidence score for each. A segmentation mask is a 2D array with the same size as the image input. SAM consists of an encoder and a decoder. The encoder takes the image and geometric prompt to produce an image embedding, image position

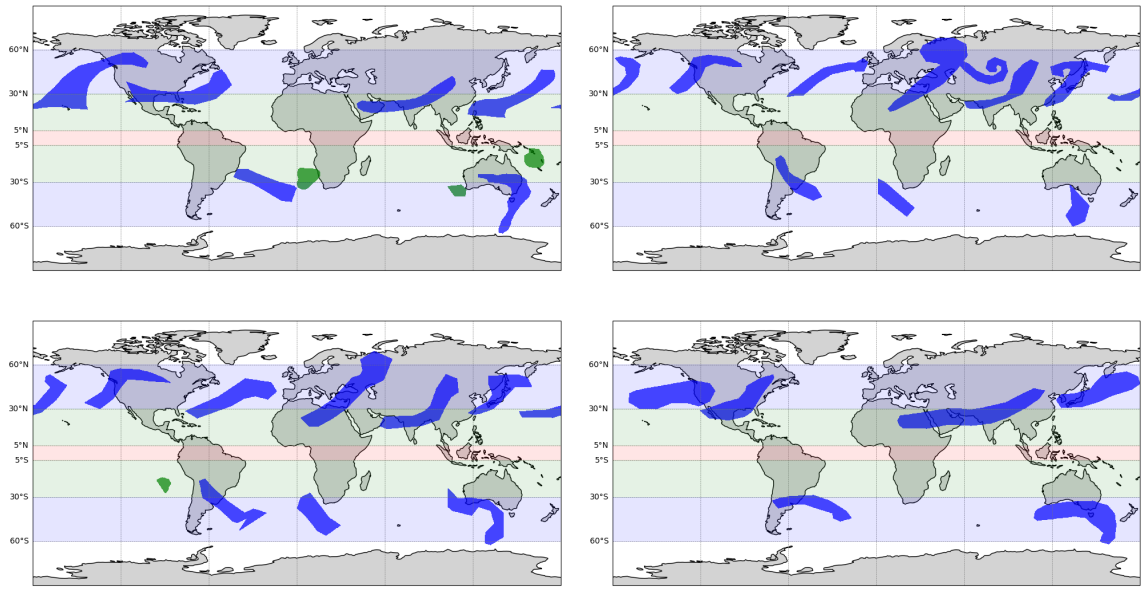

Figure 2.2: World projection visualizations of atmospheric data. The blue "Ribons" are AR masks while, the green ones are TCs. The red band denotes the equatorial region between 5°N and 5°S where TCs do not typically form. The green bands (5° to 30° in both hemispheres) indicate the primary regions for TC activity. The purple bands (30° to 60° in both hemispheres) represent the mid_latitudes where ARs typically occur.

embedding, and geometric prompt embedding. The decoder takes in these various embeddings to produce segmentation masks and confidence scores.

2.3.1 Geometric Prompts

SAM supports three kinds of geometric prompts: points, bounding boxes, and dense masks. Points and bounding boxes are defined as sparse prompts, while dense masks are categorized as dense prompts.

- A **point prompt** is a single pixel (x, y). A positive point instructs the model to include the point in the produced segmentation mask, whereas a negative point instructs the model to exclude the pixel. The model accepts multiple points to guide the segmentation.

- A **bounding box** is defined by a top-left corner (x_1, y_1) and a bottom-right corner (x_2, y_2). Bounding boxes are always treated as positive prompts, instructing the model to produce the segment within the boxed area. Multiple bounding boxes may be provided.

- **Dense masks** are represented as a low-resolution 2D grid of size $256 \times 256 \times 1$. Each entry contains a floating-point value in the range $[0, 1]$, representing the probability that a pixel belongs to the segment mask.

2.3.2 Prompt Embeddings

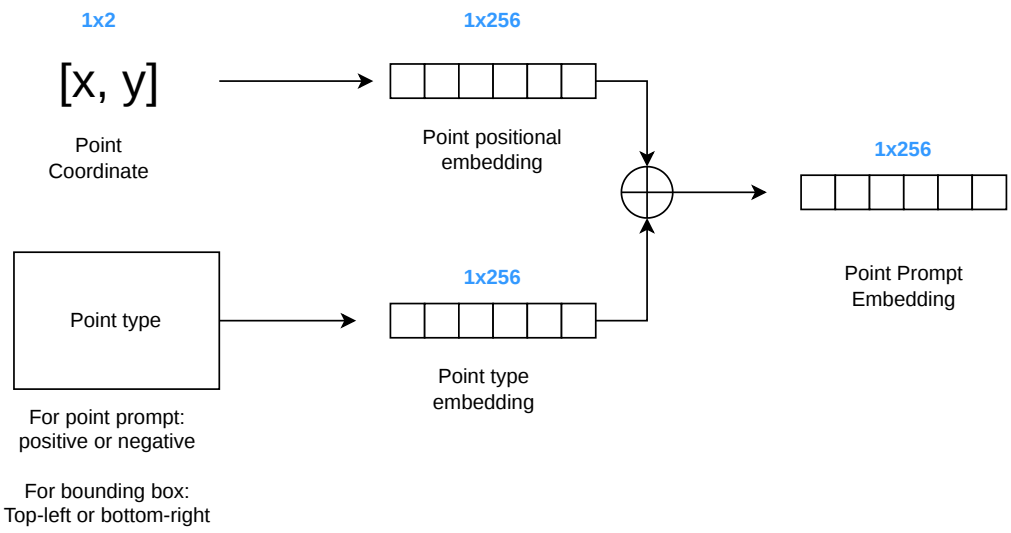

Figure 2.3: Point Prompt Embedding

The PromptEncoder module in SAM maps geometric prompts to a latent space $\mathbb{R}^{256}$. Figure **??** illustrates the point prompt encoding process. It generates a positional encoding from spatial coordinates and a type embedding, each utilizing 256 trainable parameters. These vectors are combined via element-wise addition to produce the final 256-dimensional prompt embedding. All positive clicks use the same learned "positive" vector, while negative clicks use a "negative" vector. These 512 parameters are optimized during the training phase.

Similarly, bounding boxes are represented as a pair of point embeddings. To distinguish them from standard point prompts, SAM employs specific learned embeddings for the "top-left" and "bottom-right" corners, resulting in two 256-dimensional vectors.

For the dense mask, the PromptEncoder downscales $256 \times 256 \times 1$ masks into dense embeddings of shape $256 \times 64 \times 64$, which are subsequently added element-wise to the image embeddings.

2.3.3 Image Embeddings

Figure **??** illustrates how SAM embed the image. The `ImageEncoderViT` accepts a raw input image, resizing it to a fixed resolution of 1024×1024. This input is processed into a 64×64 feature grid, creating a dense image embedding with a feature dimension of 256. Within the `ImageEncoderViT`, various trainable parameters facilitate this transformation.

Simultaneously, the `PromptEncoder` generates positional embeddings for all 64×64 coordinates, resulting in an image positional embedding of shape $64 \times$

64 × 256. The image content embedding tensor and its corresponding positional embedding are combined via element-wise addition to produce the final embedding. This final representation encapsulates both the semantic image information and the spatial positional information for all pixels.

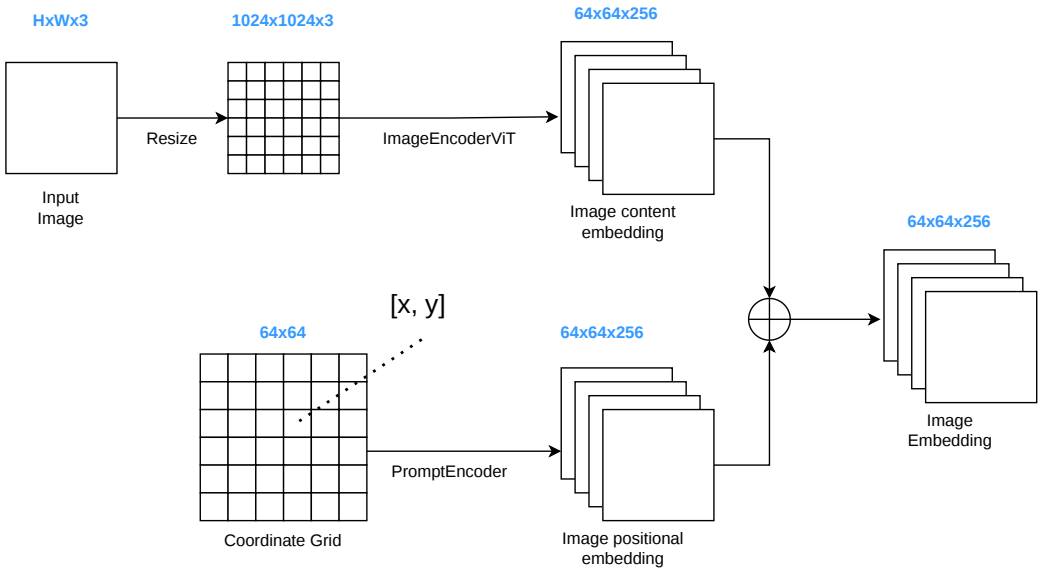

Figure 2.4: Image Embedding

2.3.4 Decoder

The decoder inputs consist of the image positional embeddings, the image embedding, the dense mask embedding, and the sparse prompts. The image embedding and dense mask embedding are combined via element-wise addition to produce a $256 \times 64 \times 64$ tensor as input for the two-way transformer. The decoder also initializes a 1×256 IoU token and a 4×256 mask token from PyTorch's "Embedding" module. The figure **??** illustrates the decoding process.

The IoU token is not connected to any user input. During the transformer's processing, it is treated as an additional input along with the four mask tokens. It participates in the same two-way cross-attention layers, allowing it to attend to both the sparse prompt embeddings and the dense image features. This process enables the token to gather global context regarding how well the predicted mask aligns with the image data.

The four mask tokens serve as queries for the transformer. The attended mask tokens finally produce segmentation mask prediction heads for the four levels of masks. Three multi-mask tokens are designed for the "subpart," "part," and "whole" hierarchical levels, while the other token is optimized for unambiguous prompts, such as when a dense mask is already provided.

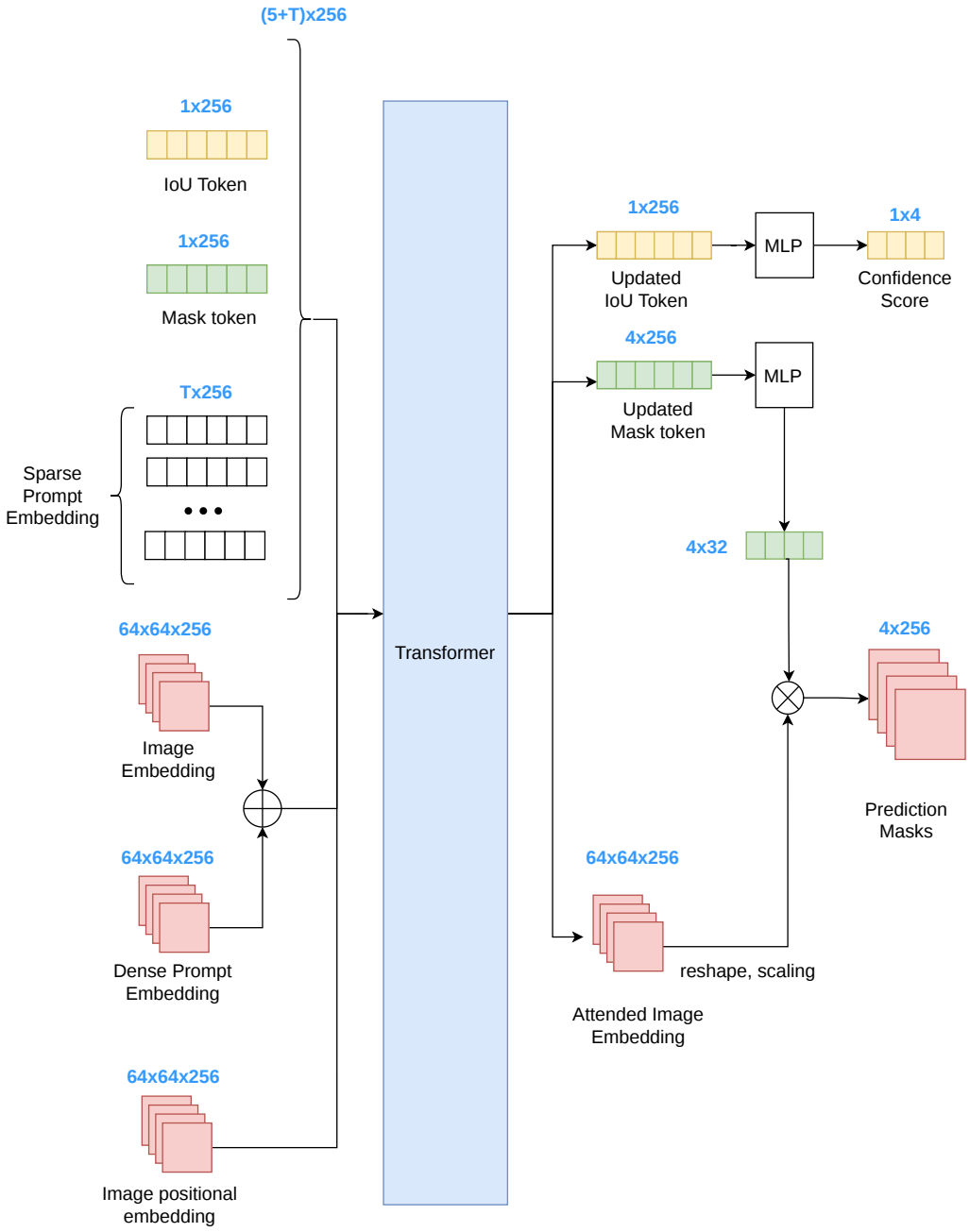

Figure 2.5: Mask Decoder Process

2.4 Parameter Efficient Fine-Tuning Techniques

2.4.1 LoRa

To maintain the foundational knowledge of the pre-trained Segment Anything Model (SAM) while specializing it for meteorological features, we utilize Low-Rank Adaptation (LoRA)[cite: 341]. This approach is particularly effective for adapting SAM to the ClimateNet domain, as it allows for domain-specific refinement without the prohibitive computational cost of full parameter fine-tuning[cite: 301, 341].

Conceptual Framework

LoRA operates on the principle that the updates to the weights during adaptation have a low "intrinsic rank". Instead of updating the massive original weight matrix W, we represent the update ΔW as the product of two much smaller, trainable matrices, A and B. For a given input x, the modified forward pass is calculated as:

$$y = Wx + \Delta Wx = Wx + BAx \tag{2.1}$$

During the training phase, the original weight matrix W remains frozen, and only the low-rank matrices A and B are updated. This significantly reduces the number of trainable parameters while allowing the model to capture the complex, non-image atmospheric patterns of Tropical Cyclones and Atmospheric Rivers.

Implementation Details

Our implementation focuses on injecting these adapters into the Transformer blocks of the SAM image encoder. Specifically, we target the Query (q) and Value (v) projection layers within the multi-head self-attention mechanism, as these layers are critical for internalizing the spatial relationships of weather phenomena.

- **Rank Selection**: We utilize a small rank r to ensure the adaptation remains efficient and prevents over-fitting to the sparse labels in the ClimateNet dataset.
- **Layer Injection**: Adapters are placed in parallel with the original linear layers, specifically targeting the q and v slices of the qkv projection.
- **Initialization**: Matrix A is initialized using a Kaiming uniform distribution to provide a stable starting gradient, while Matrix B is initialized to zero. This ensures that at the beginning of training, the "shortcut" has zero impact, and the model starts with the exact behavior of the vanilla SAM.

Strategic Advantages

By employing LoRA, we isolate the adaptation process of the encoder[cite: 343]. This methodology ensures that the model focuses exclusively on learning to extract high-quality, diagnostic features from the 16 multi-parameter atmospheric

grids[cite: 344]. This is vital for recognizing the "ribbon-like" corridors of ARs and the "circular" structures of TCs, which differ significantly from the high-frequency edges found in traditional RGB images[cite: 345].

2.4.2 Learnable Token

In CAT-SAM-T and HQ-SAM, a small learnable token of dimension 1×256 is introduced [**?**, **?**]. This token is combined via element-wise addition with the original IoU token embedding to initialize a refined IoU token. Following processing through the transformer blocks, the updated token incorporates global image context, critical geometric and categorical information from the prompt tokens, and latent mask information from other output tokens. The refined token is then passed through an MLP and subsequently undergoes a spatially point-wise product with the fused image features to facilitate high-quality mask generation.

2.5 Metrics

2.5.1 Loss Functions

In the ClimateNet dataset, a significant challenge arises from the extreme class imbalance. Background pixels constitute approximately **93.9%** of the data, while Atmospheric Rivers (ARs) represent **5.7%** and Tropical Cyclones (TCs) represent only **0.5%** [**?**, **?**]. Furthermore, TCs are substantially rarer and smaller than ARs, with an average of only **2.6** TC masks per image compared to **7.4** for ARs [**?**, **?**]. The ratio of background area to TC area is particularly skewed at **257:1** [**?**, **?**].

To effectively tackle these disparities and the "ribbon-like" or "circular" structures of these phenomena, a well-designed loss function is required [**?**, **?**]. Originally, SAM utilized a hybrid approach combining Focal Loss and Dice Loss to balance pixel-level classification with regional overlap [**?**].

Focal Loss

Standard Cross-Entropy loss often fails when foreground objects are proportionally much smaller than the background, as the model can achieve high accuracy by simply predicting the majority class. Focal Loss addresses this by adding a modulating factor to the standard criterion to focus on "hard" examples [**?**].

$$L_{focal} = -\alpha_t (1 - p_t)^\gamma \log(p_t) \tag{2.2}$$

- p_t: Represents the model's estimated probability for the ground truth class [**?**].
- γ: The focusing parameter. When $\gamma = 0$, Focal Loss is equivalent to Cross-Entropy. As γ increases, the loss for "easy" examples is down-weighted [**?**].

- $(1 - p_t)^\gamma$: The modulating factor. It reduces the loss contribution from easy pixels, forcing the model to concentrate on ambiguous pixels typically found at the boundaries of TCs and ARs [**?**].

- α_t: A balancing parameter used to handle the prior probability of classes, providing a baseline weight to the rare TC and AR pixels [**?**].

The modulating factor $(1-p_t)^\gamma$ acts as a dynamic weight that determines which outcomes contribute most to the gradient:

$$L_{focal} = \begin{cases} -\alpha(1-p)^\gamma \log(p) & \text{if } y = 1 \text{ (Focuses on False Negatives)} \\ -(1-\alpha)p^\gamma \log(1-p) & \text{if } y = 0 \text{ (Focuses on False Positives)} \end{cases} \tag{2.3}$$

- Easy TP: When $y = 1$ (ground truth = 1) and $p \to 1$, $(1 - p)^\gamma$ approaches 0, effectively "muting" pixels the model is already confident about [**?**].

- Hard FN: When $y = 1$ but $p \to 0$ (a missed detection), $(1-p)^\gamma$ remains near 1, keeping the loss signal high to force the model to identify the missed TC or AR [**?**, **?**].

- Easy TN: When $y = 0$ and $p \to 0$, p^γ becomes very small. This prevents the 93.9% of background pixels from overwhelming the gradient [**?**, **?**].

- Hard FP: When $y = 0$ but $p \to 1$ (a false alarm), p^γ stays high to penalize over-segmentation in clear atmospheric regions [**?**].

Dice Loss

While Focal Loss operates at the individual pixel level, Dice Loss evaluates the global overlap between the predicted mask and the ground truth. To better understand its relationship with classification metrics, it can be expressed in terms of True Positives (TP), False Positives (FP), and False Negatives (FN).

$$L_{dice} = 1 - \frac{2|A \cap B|}{|A| + |B|} = 1 - \frac{2TP}{2TP + FP + FN} \tag{2.4}$$

- A: The set of predicted pixels for the mask.

- B: The set of ground truth pixels.

- TP: True Positives; pixels correctly identified as part of the TC or AR.

- FP: False Positives; the over-segmentation pixels.

- FN: False Negatives; the missed detection pixels.

Dice Loss is scale-invariant. Because it normalizes the intersection by total pixels, a small error on a tiny TC mask is penalized as heavily as an error on a large AR mask [**?**]. However, standard Dice Loss treats FP and FN with equal importance, which may not be ideal for meteorological applications where missing a rare TC (a False Negative) is often more critical than a slight over-estimation of its boundary. This limitation leads to the introduction of a more flexible framework: the Tversky Loss.

Tversky Loss

The Tversky Index (TI) is a generalization of the Dice coefficient that allows for asymmetrical weighting of False Positives and False Negatives.

$$L_{Tversky} = 1 - \frac{TP}{TP + \alpha FP + \beta FN} \tag{2.5}$$

- α: The weight assigned to False Positives. Increasing α improves precision by penalizing predicted pixels that do not belong to the ground truth.
- β: The weight assigned to False Negatives. Increasing β improves recall (sensitivity) by penalizing the model for missing ground truth pixels.

If $\alpha = \beta = 0.5$, the function simplifies to the Dice Loss. If $\alpha = \beta = 1.0$, it simplifies to the Jaccard Index (IoU).

Hybrid Loss Functions

Modern segmentation adaptations, such as CAT-SAM [**?**] and HQ-SAM [**?**], frequently employ hybrid loss strategies to leverage the strengths of both distribution-based and region-based functions [**?**, **?**, **?**]. While the original SAM architecture focuses on a linear combination of Focal and Dice losses for general-purpose segmentation, domain-specific adaptations often swap Dice for Tversky to handle high-stakes sensitivity requirements [**?**, **?**].

In this study, we use the combination of Tversky and Focal Loss for adapting SAM to the ClimateNet domain. While the Tversky component ensures the model captures the full extent of weather features by prioritizing recall through β, the Focal component ensures the model classifies difficult boundary pixels that are otherwise lost in the massive background grid [**?**, **?**]. This hybrid approach effectively mitigates the challenges posed by the extreme background-to-TC ratio [**?**].

Chapter 3

Approach

3.1 Pipeline

While the Segment Anything Model (SAM) has demonstrated remarkable zero-shot generalization in the computer vision domain, its application to meteorological data presents two fundamental challenges. First, SAM is inherently designed for three-channel RGB images, whereas climate data, such as the ClimateNet dataset, consists of multi-parameter atmospheric grids. Unlike natural images, these variables lack high-frequency edges and clear semantic boundaries, making the standard image encoder less effective at capturing the underlying geophysical features.

Second, the operational utility of SAM is limited by its reliance on manual geometric prompts (points, boxes, or masks) to guide segmentation. In a real-time meteorological forecasting context, requiring a human expert to provide manual prompts for every global raster is impractical. Therefore, our objective is to transition SAM toward a prompt-free architecture capable of autonomous detection.

To achieve a prompt-free system that remains grounded in the physical realities of the dataset, we divide our approach into two distinct phases, as illustrated in Figure **??**. In the Adaptation Phase, we experiment with a learnable token-based approach, inspired by HQ-SAM [**?**] and CAT-SAM-T [**?**], as well as a LoRA-based approach, inspired by LoRA-SAM [**?**]. In the Prompt Generation Phase, we first use a pretrained CGNet from ClimateNet to produce auxiliary masks. We also experiment with a multi-scale fusion module, inspired by Self-Prompt SAM [**?**].

Phase 1: Adaptation and Encoder Refinement

The primary objective of the first phase is to enable the SAM to interpret non-image atmospheric variables, which differ significantly from the RGB data for which the model was originally optimized. To bridge the structural gap between the 16 multi-channel atmospheric grids and the fixed input requirements of the SAM image encoder, we implement a dual adaptation strategy:

1. Learnable Token-based Adaptation: We introduce learnable tokens to compress the high-dimensional atmospheric channels into a latent representation that aligns with the encoder's expected feature space.

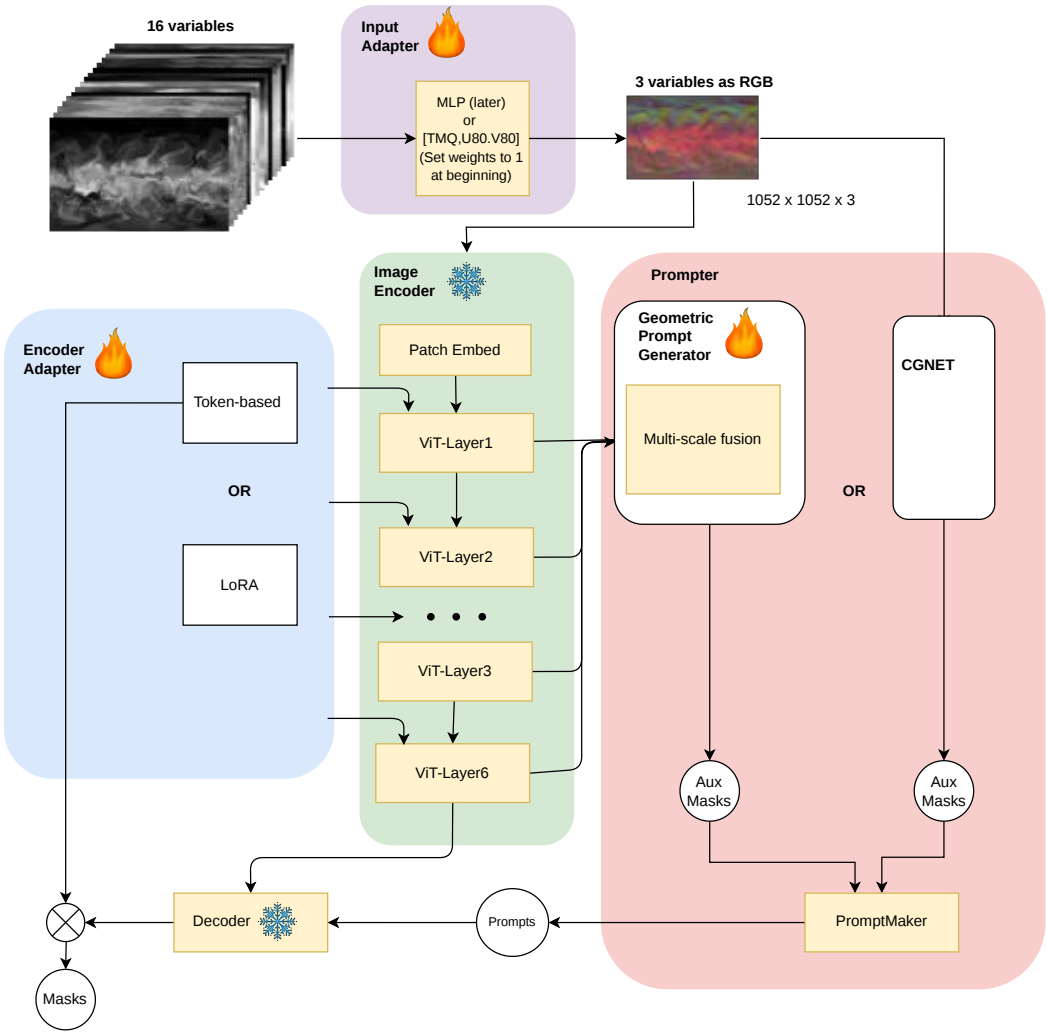

Figure 3.1: Suggested Pipeline

2. Low-Rank Adaptation (LoRA): To maintain the foundational knowledge of the pre-trained model while specializing it for meteorological features, we utilize LoRA to fine-tune specific layers within the encoder and mask decoder.

During this stage, the model is trained under the assumption of "perfect prompts". By providing the system with ground-truth bounding boxes or point coordinates during the training phase , we isolate the adaptation process of the encoder and the mask decoder. This methodology ensures that the model focuses exclusively on learning to extract high-quality, diagnostic features from critical variables.

By removing the variability of prompt quality, we can more accurately evaluate the model's ability to handle the "ribbon-like" structures of Atmospheric Rivers (ARs) and the circular patterns of Tropical Cyclones (TCs) , effectively mitigating the challenges posed by data imbalance and the lack of traditional image-style

boundaries.

Phase 2: Automated Prompt Generation

Once the encoder is successfully adapted to the ClimateNet domain, we introduce a generator module to eliminate the need for manual intervention. This generator leverages the embeddings produced by the encoder to automatically predict the locations of TCs and ARs. By treating the image embeddings as a rich source of contextual information, the generator produces auxiliary segmentation masks. These masks are then processed to generate point and bounding box prompts, which are fed into the mask decoder to produce the final segmentation for evaluation.

3.2 Dataset Preparation

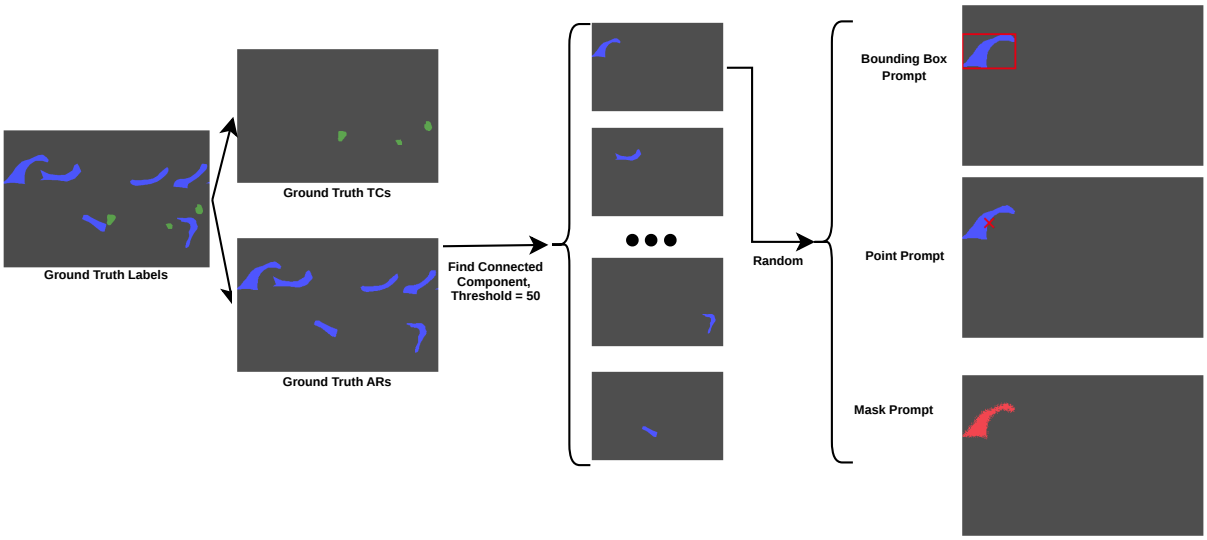

Figure 3.2: Prompt Preparation Process

3.3 Architectures

3.3.1 Encoder Adaptation

Learnable Token-based approach

LoRA approach

To adapt SAM to interpret multi-parameter atmospheric grids, we apply LoRA adapters to each layer of the Vision Transformer (ViT) encoder [**?**, **?**]. This "sur-

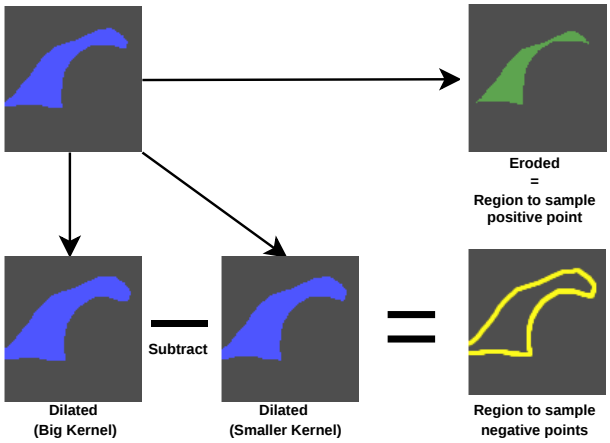

Figure 3.3: Overview

[!h]

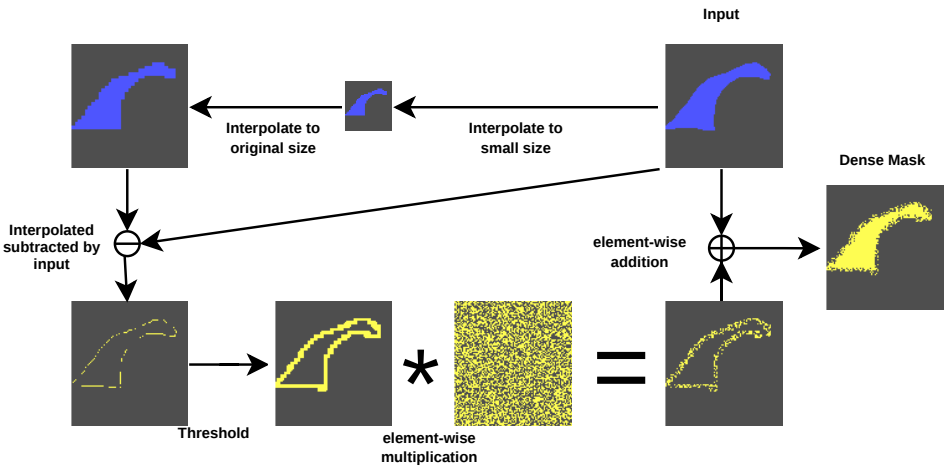

Figure 3.4: Detail

Figure 3.5: Token-based approach architecture

geon" approach specifically targets the Query (q), Key (k), and Value (v) projection layers within the multi-head self-attention mechanism, as these layers are critical for capturing the spatial relationships of complex weather phenomena. Mathematically, for an input feature $x \in \mathbb{R}^{1\times d}$, the adapted forward pass for a given projection

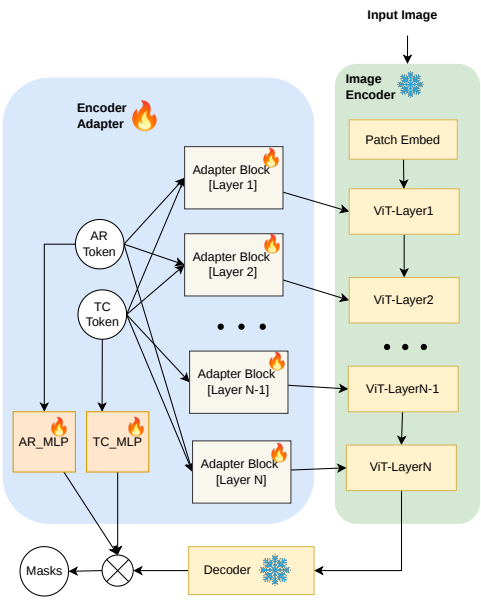

Figure 3.6: Overview

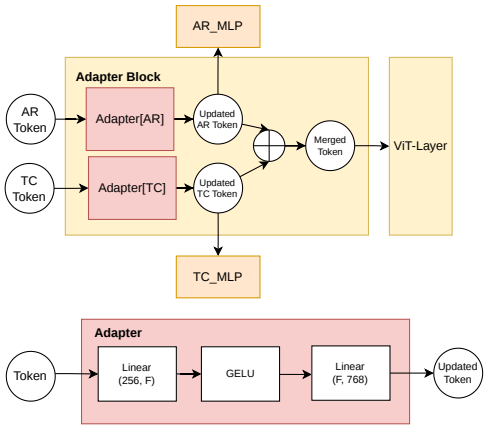

Figure 3.7: Detail

Figure 3.8: Token-based approach architecture

is expressed as:

$$h = W_0 x + \Delta W x = W_0 x + BAx \tag{3.1}$$

where W_0 is the frozen pre-trained weight, and $B \in \mathbb{R}^{d \times r}$ and $A \in \mathbb{R}^{r \times d}$ are the learnable low-rank matrices [**?**, **?**]. We initialize matrix A with a Kaiming uniform distribution and matrix B to zero so that the initial state of the model is identical to the original SAM. At the output stage, we introduce two specialized mask decoders with learnable parameters to handle the distinct morphological characteristics of the target classes:

- **TC Decoder**: Optimized for the distinct circular structures of Tropical Cyclones, addressing a severe 257:1 background-to-foreground ratio.

- **AR Decoder**: Tailored for the narrow, "ribbon-like" corridors of Atmospheric Rivers, which present a more moderate 17:1 class imbalance.

This dual-decoder design allows the model to learn class-specific localization priors and structural discovery independently for each meteorological feature.

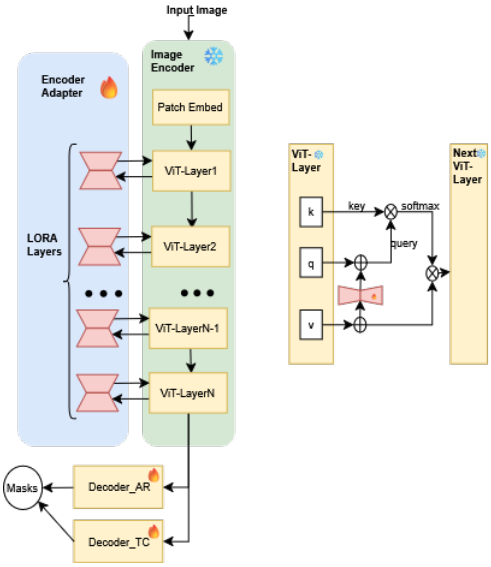

Figure 3.9: Overview

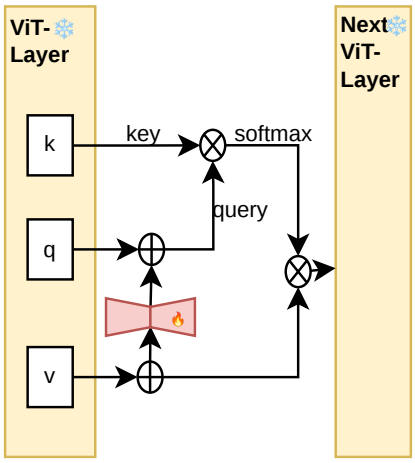

Figure 3.10: Detail

Figure 3.11: LoRA adaptation architecture

3.3.2 Automatical Prompt Generation

3.3.3 CGNet

Multi-scale Fusion

3.4 Hyperparameter Optimisation

3.4.1 Loss Function

To adapt the Segment Anything Model (SAM) to the unique characteristics of the ClimateNet dataset, a systematic hyperparameter optimization was conducted. The primary goal of this search was to identify the optimal balance between pixel-wise classification accuracy and regional mask overlap, specifically addressing the extreme class imbalance where background pixels constitute approximately 93.9% of the data.

Search Strategy and Configuration

We implemented a random search strategy over 40 iterations to explore the high-dimensional space of the hybrid loss function. To ensure computational efficiency during this search phase, the models were trained on a representative subset consisting of 20% of the training data. Validation was performed using the ViT-B (Vision Transformer Base) version of the SAM image encoder.

This methodology is grounded in several practical considerations:

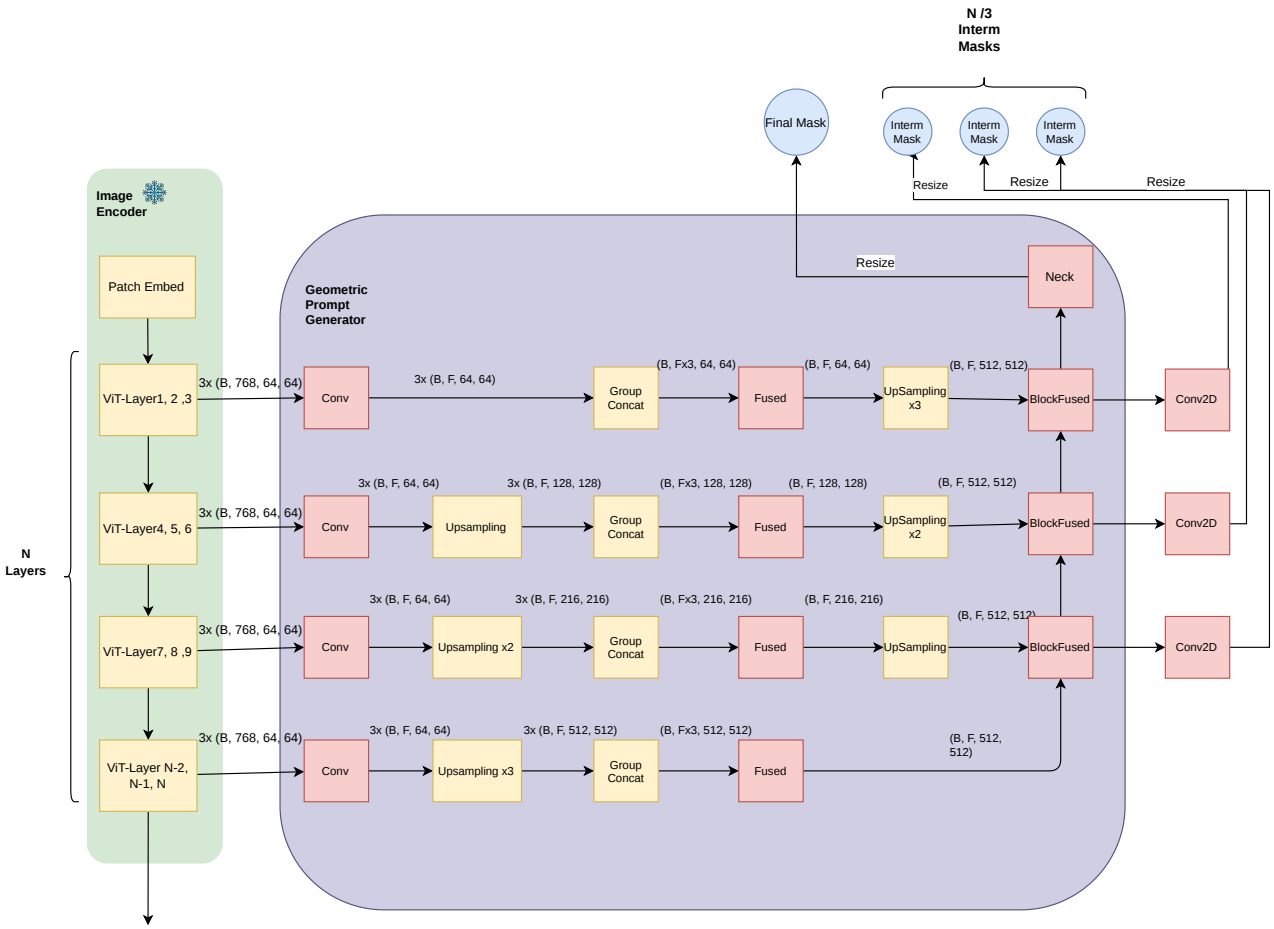

Figure 3.12: Multi-scale Fusion Module

- Efficiency: Training on a 20% subset allows for a broader exploration of the parameter space within a fixed compute budget.

- Generalizability: Because ClimateNet consists of global atmospheric rasters with recurring geophysical patterns, a 20% subset provides sufficient structural diversity—including circular TC structures and ribbon-like AR corridors—to identify robust hyperparameter trends that generalize to the full dataset.

- Architecture Consistency: Utilizing the ViT-B backbone ensures that the identified hyperparameters are optimized for the specific feature resolution (64×64 feature grid) and embedding space (256 dimensions) used in the final adaptation phase.

Search Space

The search space was specifically designed to prioritize Recall β over Precision α for TCs, as missing a rare storm event is considered a more significant failure in a meteorological context than a slight over-segmentation of its boundary.

Parameter	Feature	Search Values	Rationale
Tversky (α, β)	TC	(0.2, 0.8), (0.1, 0.9), (0.3, 0.7)	Prioritizes recall for rare circular structures.
Tversky (α, β)	AR	(0.3, 0.7), (0.4, 0.6), (0.5, 0.5)	Balanced approach for common ribbon forms.
Focal (α, γ)	TC	(0.99, 2.0), (0.99, 5.0), (0.995, 8.0)	Combats the 257:1 background-to-TC ratio.
Focal (α, γ)	AR	(0.80, 2.0), (0.85, 5.0), (0.90, 2.0)	Addresses the 17:1 background-to-AR ratio.

*Table 3.1: Hyperparameter search space for SAM adaptation on ClimateNet [**?**, **?**, **?**].*

During the adaptation phase, the loss weights for the Tversky and Focal components were held constant ($w = 1.0$) to ensure gradient stability while the model learned to interpret the 16 multi-parameter atmospheric grids. The search utilized a fixed budget of 50 epochs per iteration. By varying the focusing parameter γ up to 8.0, we forced the model to significantly down-weight "easy" background pixels and concentrate on the ambiguous boundaries of the atmospheric features.

3.5 Metrics

Chapter 4

Result

4.1 Preliminary Result

4.1.1 Hyperparameter Optimisation

Hyperparameter optimization uses a multi-fidelity approach employed by utilizing a ViT-B encoder and subsampling both the training and validation sets to 20% of their original size, as described in **??**. To assess the effectiveness of each configuration, two primary metrics are reported: Best Max mIoU and Mean Max mIoU.

The Best Max mIoU represents the absolute peak performance achieved by a single run within a specific parameter group, indicating the model's highest potential under those conditions. Mean Max mIoU averages the peak mIoU across all runs sharing the same parameter setting, serving as an indicator of the setting's reliability and stability. High performance in both metrics suggests a configuration that is not only capable of reaching high accuracy but does so consistently.

The experiments specifically targeted the extreme class imbalance within ClimateNet, where TCs occupy only 0.5% of the global grid (a 257:1 background-to-foreground ratio) compared to 5.7% for ARs (a 17:1 ratio).

Tversky Loss Parameters for Tropical Cyclones

For the TC class, the search space was biased toward high recall to mitigate the severe imbalance. Experimental results indicate that an α_{tc} of 0.3 paired with a β_{tc} of 0.7 yielded the most robust performance, achieving a peak mIoU of 0.3326. Extremely aggressive recall settings, such as an α_{tc} of 0.05, led to training instability and a failure to converge, resulting in a negligible mIoU of 0.0051.

Tversky Loss Parameters for Atmospheric Rivers

Atmospheric Rivers, characterized by a more moderate 17:1 imbalance ratio, benefited from a more balanced loss configuration. The highest mIoU for the AR class,

α_{tc}	β_{tc}	Mean Max IoU TC	Best Max IoU TC
0.30	0.70	0.2092	0.3326
0.20	0.80	0.1946	0.3096
0.15	0.85	0.1864	0.2001
0.10	0.90	0.1737	0.1970
0.05	0.95	0.0051	0.0051

Table 4.1: Impact of Tversky α/β parameters on Tropical Cyclone segmentation.

0.3028, was achieved with a balanced configuration of $\alpha_{ar} = 0.5$ and $\beta_{ar} = 0.5$. Unlike the TC class, AR detection does not require extreme recall weighting.

α_{ar}	β_{ar}	Mean Max IoU AR	Best Max IoU AR
0.50	0.50	0.2387	0.3028
0.40	0.60	0.2392	0.2788
0.30	0.70	0.2190	0.2801
0.20	0.80	0.1902	0.1902

Table 4.2: Impact of Tversky α/β parameters on Atmospheric River segmentation.

Focal Loss Alpha and Gamma for Tropical Cyclones

The Focal loss configuration for TC prioritized high α and γ values to penalize missing difficult targets. A γ_{tc} of 5.0 combined with an α of 0.99 provides the optimal focus parameter, providing necessary emphasis on hard boundary pixels. Increasing γ_{tc} to 8.0 caused performance to drop to a max mIoU of 0.2714, likely because the loss became overly sensitive to outliers or ground truth noise.

α_{f_tc}	γ_{tc}	Mean Max IoU TC	Best Max IoU TC
0.990	5.0	0.2123	0.3326
0.990	2.0	0.2101	0.3001
0.995	8.0	0.1482	0.2714

Table 4.3: Performance of Tropical Cyclone detection across Focal Gamma settings.

Focal Loss Alpha and Gamma for Atmospheric Rivers

For the AR class, a standard γ_{ar} of 2.0 outperformed higher focus settings. This setting achieved the peak mIoU of 0.3028. Higher γ values, such as 5.0, were less

effective for ARs, reducing the peak performance to 0.2652. This confirms that for features with a moderate 17:1 ratio, extreme focal weighting is unnecessary and can potentially hinder the model's ability to learn the general shape of the atmospheric feature.

α_{f_ar}	γ_{ar}	Mean Max IoU AR	Best Max IoU AR
0.90	2.0	0.2444	0.3028
0.85	5.0	0.2310	0.2652
0.80	3.0	0.0765	0.1902

Table 4.4: Performance of Atmospheric River detection across Focal Gamma settings.

Loss Component Weight

Optimization revealed a numerical imbalance between Focal and Tversky loss components. Initial experiments showed Focal loss values were consistently lower than Tversky components. While heuristics often suggest weighting smaller components for numerical parity, empirical evidence showed this degraded segmentation performance. As shown below, increasing focal weight beyond 10 dropped performance despite achieving comparable loss magnitudes.

Focal Weight	Mean Focal Loss	Mean Tversky Loss	Max mIoU TC	Max mIoU AR
1	0.03	1.98	0.3326	0.2684
5	0.12	2.43	0.1600	0.2198
10	0.22	2.53	0.3410	0.2359
20	0.25	2.69	0.2418	0.2033
50	0.28	2.88	0.1664	0.1572
100	0.42	3.03	0.1334	0.1478

Table 4.5: Comparison of loss component magnitudes and resulting segmentation performance across different Focal weights.

The region_based Tversky signal primarily drives spatial localization for microscopic targets. High focal weights cause gradients to be dominated by pixel_wise classification pressures, prematurely biasing the model toward background suppression before Tropical Cyclone structural features are localized. A focal weight of 10 best balances these components, preserving Tversky dominance for structural discovery while allowing Focal loss to refine boundaries.

Summary of Hyperparameter Optimization Results

The table below summarizes the optimal parameter settings identified during the random search and their corresponding peak performance metrics.

Metric Category	Parameter	Optimal Value	Peak mIoU
Tversky TC	α_{tc}/β_{tc}	0.3 / 0.7	0.3326
Tversky AR	α_{ar}/β_{ar}	0.5 / 0.5	0.3028
Focal TC	$\alpha_{f_tc}/\gamma_{tc}$	0.99 / 5.0	0.3326
Focal AR	$\alpha_{f_ar}/\gamma_{ar}$	0.90 / 2.0	0.3028

Table 4.6: Summary of optimal loss hyperparameters for ClimateSAM adaptation.

4.2 Adapt SAM to ClimateNet

4.2.1 Lora

Integrating single LoRA component to SAM

This section presents the performance and parameter efficiency of integrating LoRA into the SAM image encoder. Following the optimal hyperparameters identified in the preliminary results, all experiments were conducted using a learning rate of $1e^{-4}$. The evaluation compares vit_l and vit_b backbones across ranks 32 and 64 to determine the impact of model capacity and adaptation rank on segmentation accuracy.

Backbone	Rank	IOU AR	IOU TC
vit_l	64	0.4136	0.6005
vit_l	32	0.4060	0.6009
vit_b	64	0.4387	0.6201
vit_b	32	0.4222	0.6020

Table 4.7: LoRA Performance Comparison

Table **??** details the IOU scores for AR and TC. The vit_b backbone consistently achieves higher accuracy than vit_l across all configurations. At rank 64, vit_b reaches an IOU of 0.4387 for AR and 0.6201 for TC, while vit_l achieves 0.4136 and 0.6005, respectively. For both architectures, increasing the rank from 32 to 64 results in improved IOU scores, particularly for AR detection.

The parameter distribution and training overhead are shown in Table **??**. The vit_l configuration with rank 64 utilizes 14.41M trainable parameters, which represents 4.41% of the total model. In comparison, the vit_b configuration with rank 64

uses 10.48M trainable parameters, accounting for 10.06% of its total architecture. While vit_l has a larger total parameter count due to its frozen backbone, vit_b requires fewer absolute trainable parameters and provides superior IOU results.

Backbone	Rank	Adapter	Decoder	LoRA	Train	Frozen	Total	% Train
vit_l	64	5.2K	8.12M	6.29M	14.41M	312.34M	326.75M	4.41%
vit_l	32	5.2K	8.12M	3.14M	11.26M	312.34M	323.61M	3.48%
vit_b	64	5.2K	8.12M	2.35M	10.48M	93.73M	104.21M	10.06%
vit_b	32	5.2K	8.12M	3.14M	9.30M	93.73M	103.03M	9.03%

Table 4.8: Detailed Parameter Breakdown

The training dynamics illustrated in Figure **??** provide insights into model generalization and overfitting. While AR validation curves show steady improvement or stabilization, TC curves exhibit significant fluctuations and a decline in performance after an early peak.

For both vit_b and vit_l backbones, the TC validation IOU reaches its maximum within the first 10 to 15 epochs before degrading. This behavior suggests the models begin to memorize specific noise in TC training samples rather than learning generalized features. This trend is especially pronounced in vit_l configurations, which fail to maintain a stable validation IOU despite their larger capacity. The instability in TC curves suggests that its smaller, localized structures are more susceptible to overfitting during LoRA adaptation.

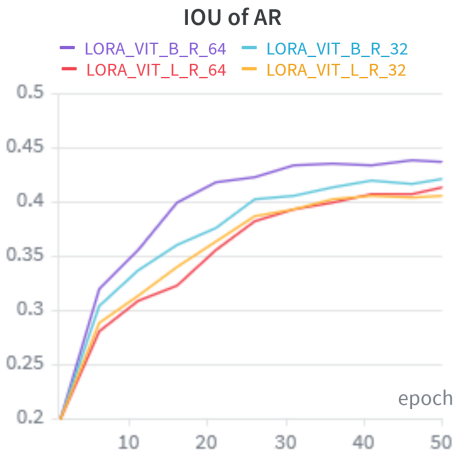

Figure 4.1: AR Validation IOU

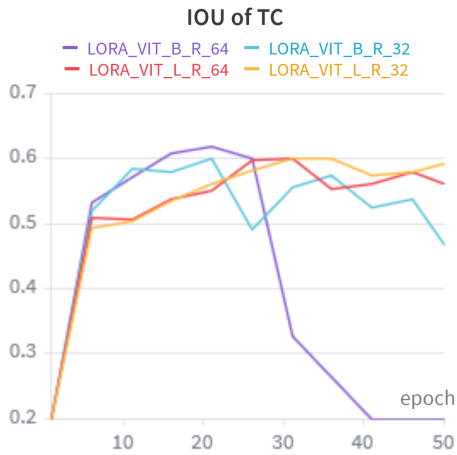

Figure 4.2: TC Validation IOU

Figure 4.3: Validation IOU curves for AR and TC during training

Integrating single LoRA component to SAM [WITH AUGMENTATION]

To address TC overfitting, we investigated data augmentation using Horizontal Flip, Vertical Flip, and Random Horizontal Roll ($p = 0.5$, shift_limit= 0.5). We hypothesized these geometric transforms would be counterproductive as ClimateNet relies on global spatial compositions where geographic orientation is critical. The results in Figure **??** confirm this; while augmentation narrowed the training-validation gap, it hindered effective generalization, causing a sharp mIoU decline for both AR and TC compared to the non-augmented baseline.

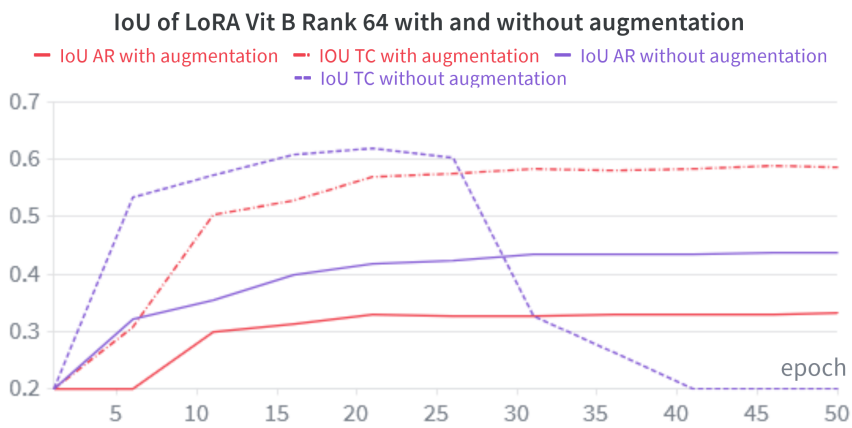

Figure 4.4: Augmentation Performance

Figure 4.5: Comparison between standard LoRA and augmented training.

Integrating specialized LoRA components for ARs and TCs

4.2.2 Token-based

SAM with Single infused token

SAM with Infused Specialized Token

SAM with Concatenated Specialized Token

4.3 Automatic Prompt Generator for SAM

4.3.1 SAM with CGNet as helper

4.3.2 SAM with multi-scale feature infusion