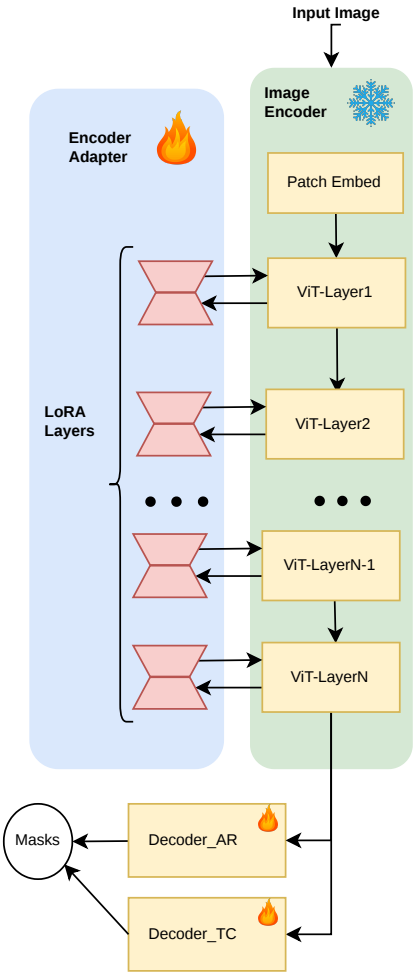
Input Image
Image Encoder
Encoder Adapter
Patch Embed
ViT-Layer1
ViT-Layer2
ViT-LayerN-1
ViT-LayerN
LoRA Layers
Masks
Decoder_AR
Decoder_TC

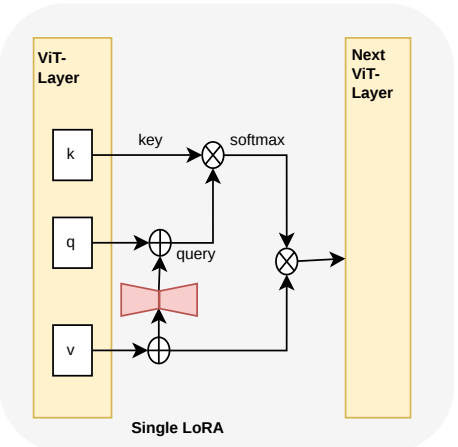
ViT-Layer
Next ViT-Layer
k
q
v
key
softmax
query
Single LoRA

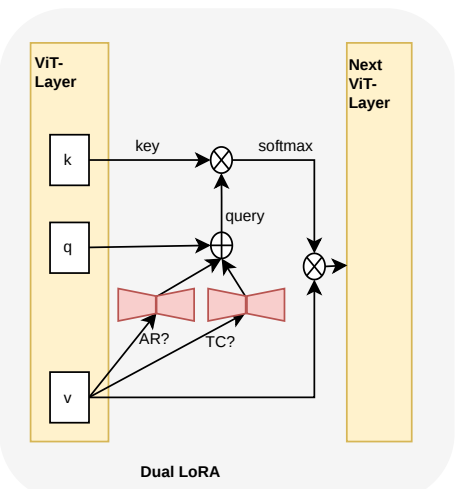
ViT-Layer
Next ViT-Layer
k
q
v
key
softmax
query
AR?
TC?
Dual LoRA