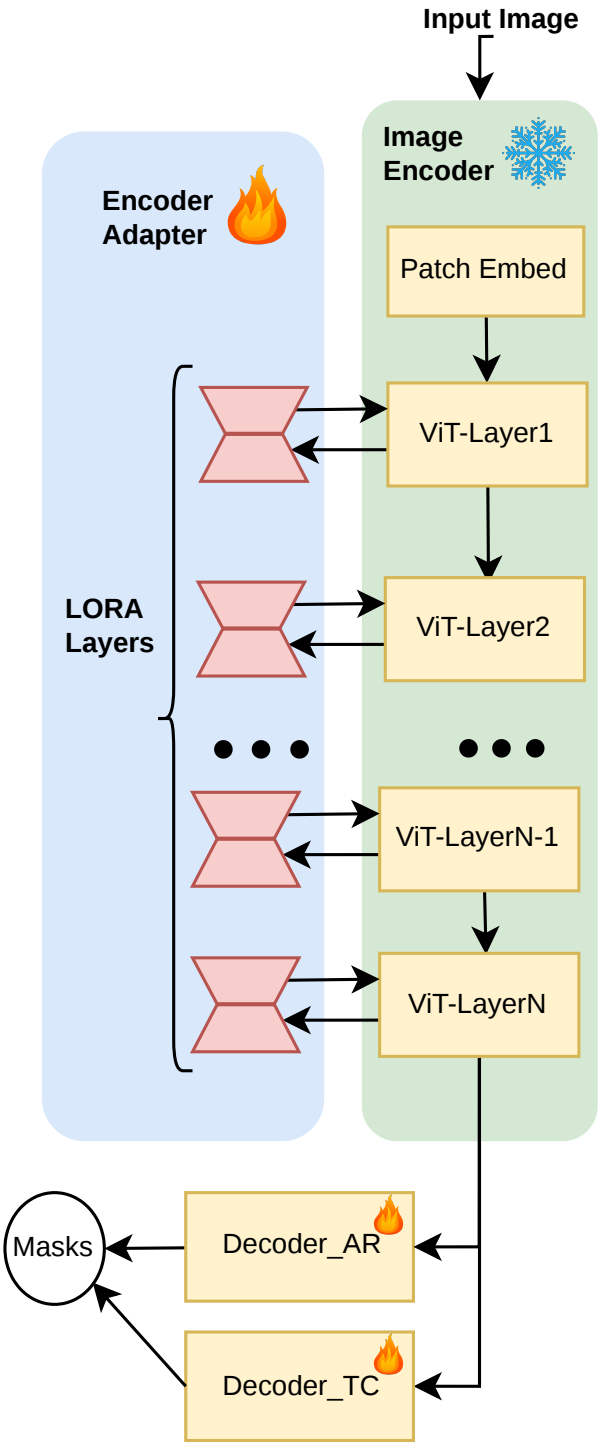
Input Image
Image Encoder
Encoder Adapter
Patch Embed
ViT-Layer1
ViT-Layer2
LORA Layers
ViT-LayerN-1
ViT-LayerN
Masks
Decoder_AR
Decoder_TC