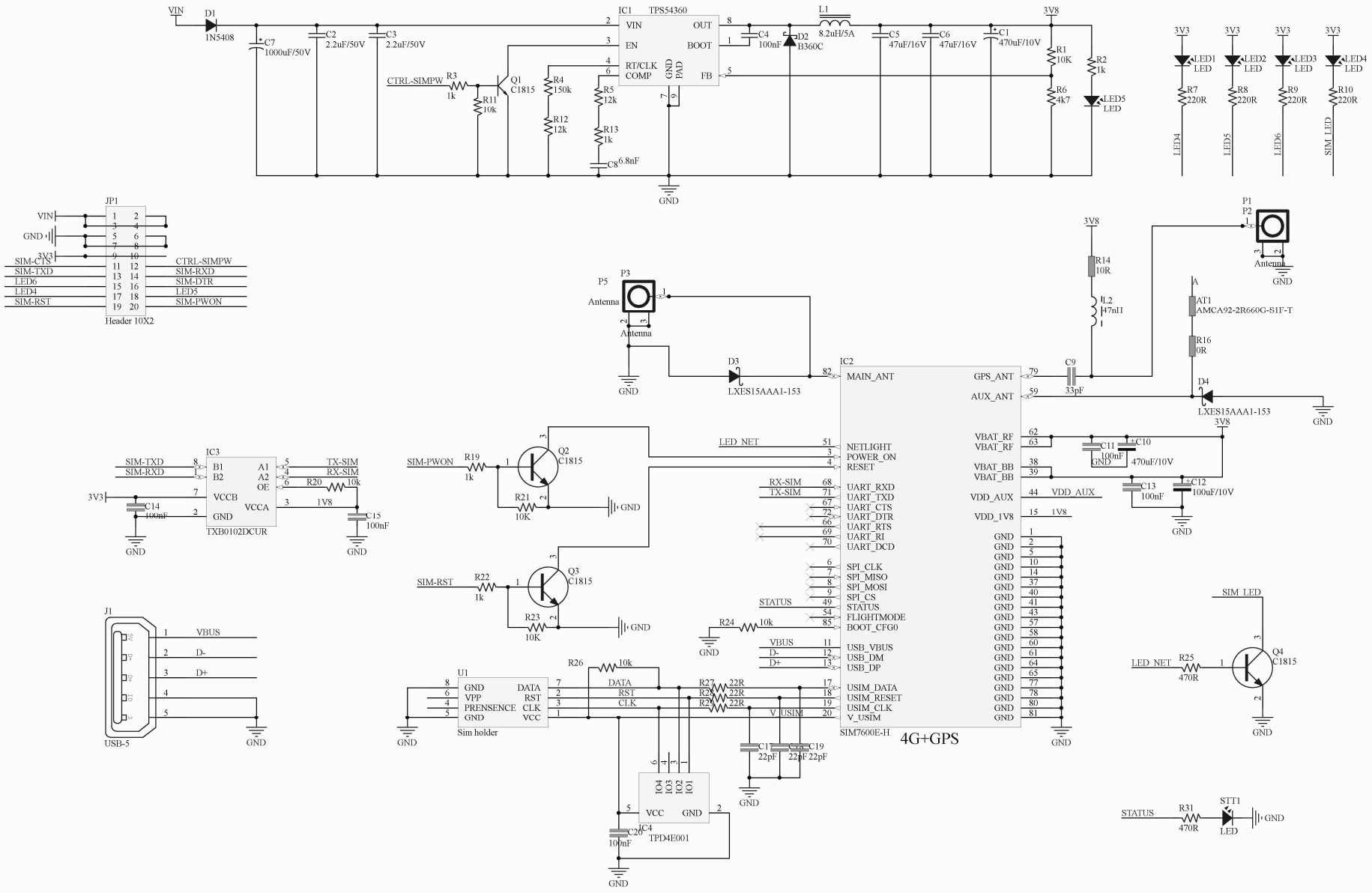

Title		
Size A3	Number	Revision
Date: 7/8/2025		Sheet of
File: D:\Desktop\..\ESM-4G-V1.1.SchDoc		Drawn By: