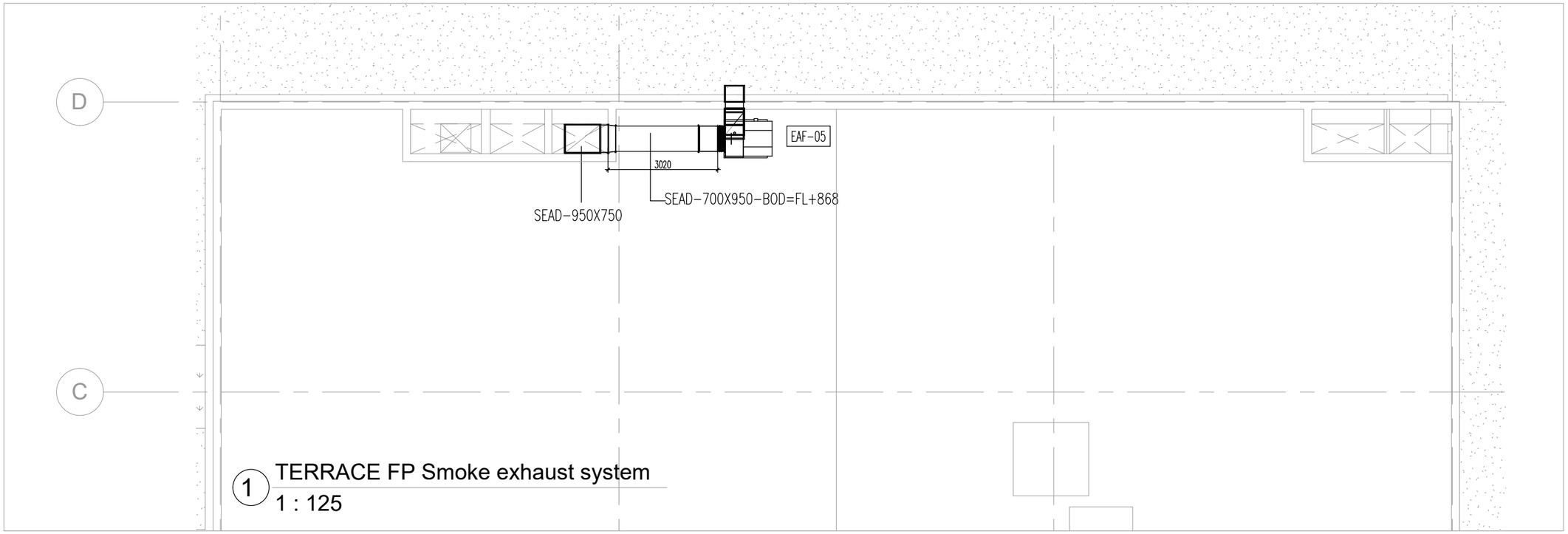

1 TERRACE FP Smoke exhaust system
1 : 125

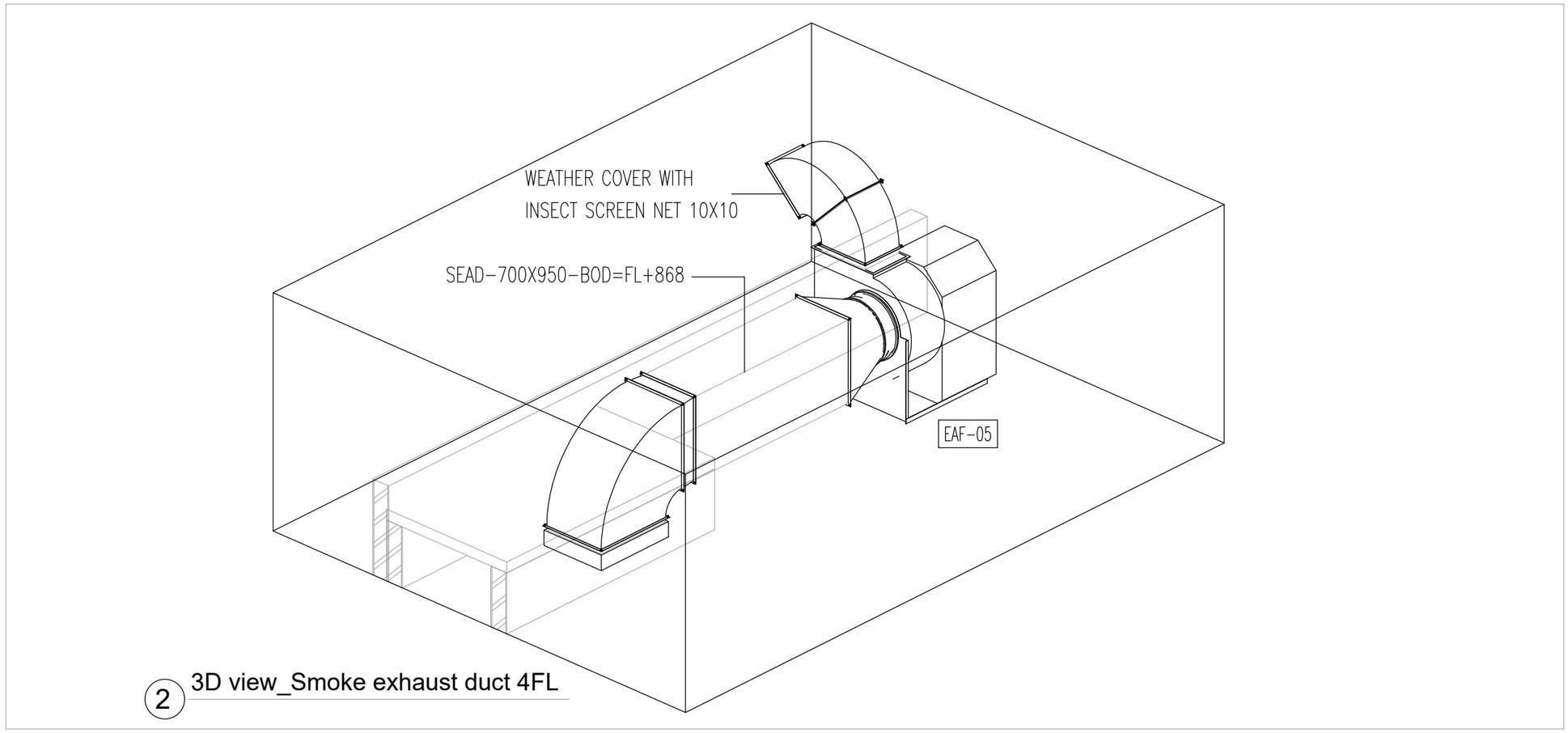

2 3D view_Smoke exhaust duct 4FL

NOTE :

THIS DRAWING IS THE PROPERTY OF IBM AND IS NOT TO BE COPIED REPRODUCED OR DISCLOSED TO ANY UNAUTHORIZED PERSON EITHER WHOLLY OR IN PART WITHOUT PRIOR CONSENT. DO NOT SCALE THIS DRAWING USE ALL FIGURED DIMENSIONS ONLY. ALL FIGURED DIMENSIONS TO BE CHECKED ON SITE PRIOR TO EXECUTION. ALL DISCREPANCIES, ERRORS & OMISSIONS TO BE REPORTED TO THE ARCHITECT PRIOR TO THE EXECUTION. LAYOUT AND DIMENSIONS OF EXISTING BUILDING TO BE CHECKED ON THE SITE.
THE REFERENCE DESIGN/ARCHITECTURE SHALL BE SUITABLY MODIFIED TO COMPLY WITH SITE AS A REFERENCE. THE SCHEME/LAYOUT/DESIGN SHALL BE VERIFIED BY A LOCAL CONSULTANT/ARCHITECT & CERTIFIED FOR COMPLIANCE TO LOCAL RULES & BYLAWS ETc FOR FINAL COSTING/FIT FOR IMPLEMENTATION.
THE REFERENCE DESIGN/ARCHITECTURE SHALL BE SUITABLY MODIFIED TO COMPLY WITH SITE SPECIFIC/CUSTOMER SPECIFIC REQUIREMENTS.

REV. NO	DESCRIPTION	DATE	SIGN
00	ISSUED FOR APPROVAL	04-01-2018	CoC

REVISIONS

DETAIL DESIGN

DC CONSULTANTS

kyndryl

CLIENTS

VietinBank

PROJECT TITLE:

SUBJECT OF DRAWING :

SMOKE EXHAUST SYSTEM
IN 4TH FP

SCALE : 1/125
DATE :
PREPARED :
APPROVED :
DRAWING NO.: VTB.AS.M-804
REV. NO.