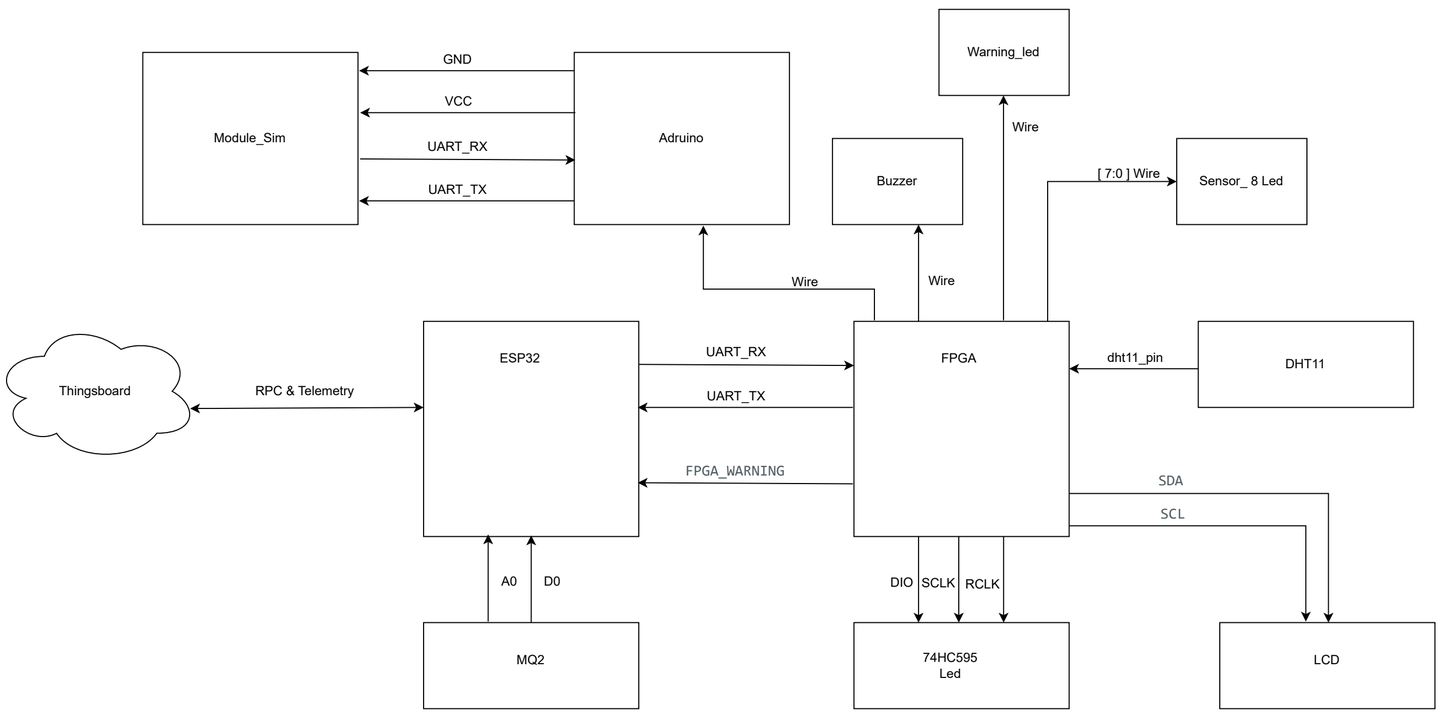
Module_Sim
GND
VCC
UART_RX
UART_TX
Adruino
Warning_led
Wire
Buzzer
[7:0] Wire
Sensor_ 8 Led
Wire
Wire
Thingsboard
RPC & Telemetry
ESP32
UART_RX
UART_TX
FPGA_WARNING
FPGA
dht11_pin
DHT11
SDA
SCL
A0
D0
MQ2
DIO
SCLK
RCLK
74HC595
Led
LCD

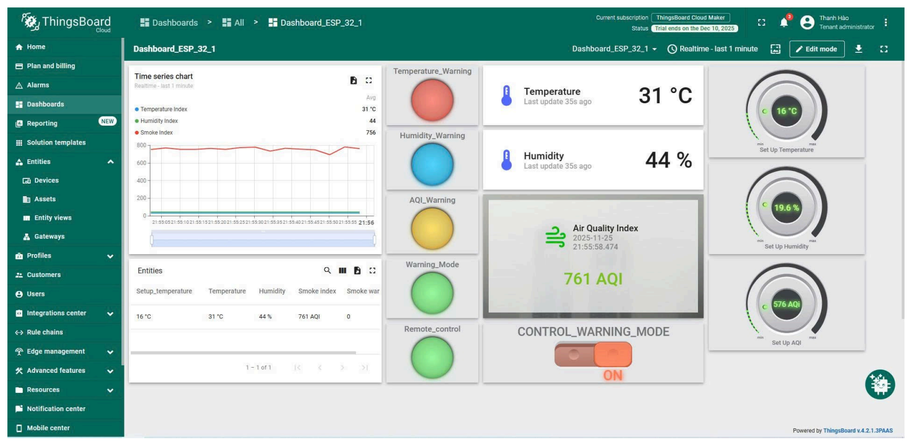
ThingsBoard
Dashboard_ESP_32_1
Time series chart
Temperature
31 °C
Humidity
44 %
Air Quality Index
761 AQI
CONTROL_WARNING_MODE
ON

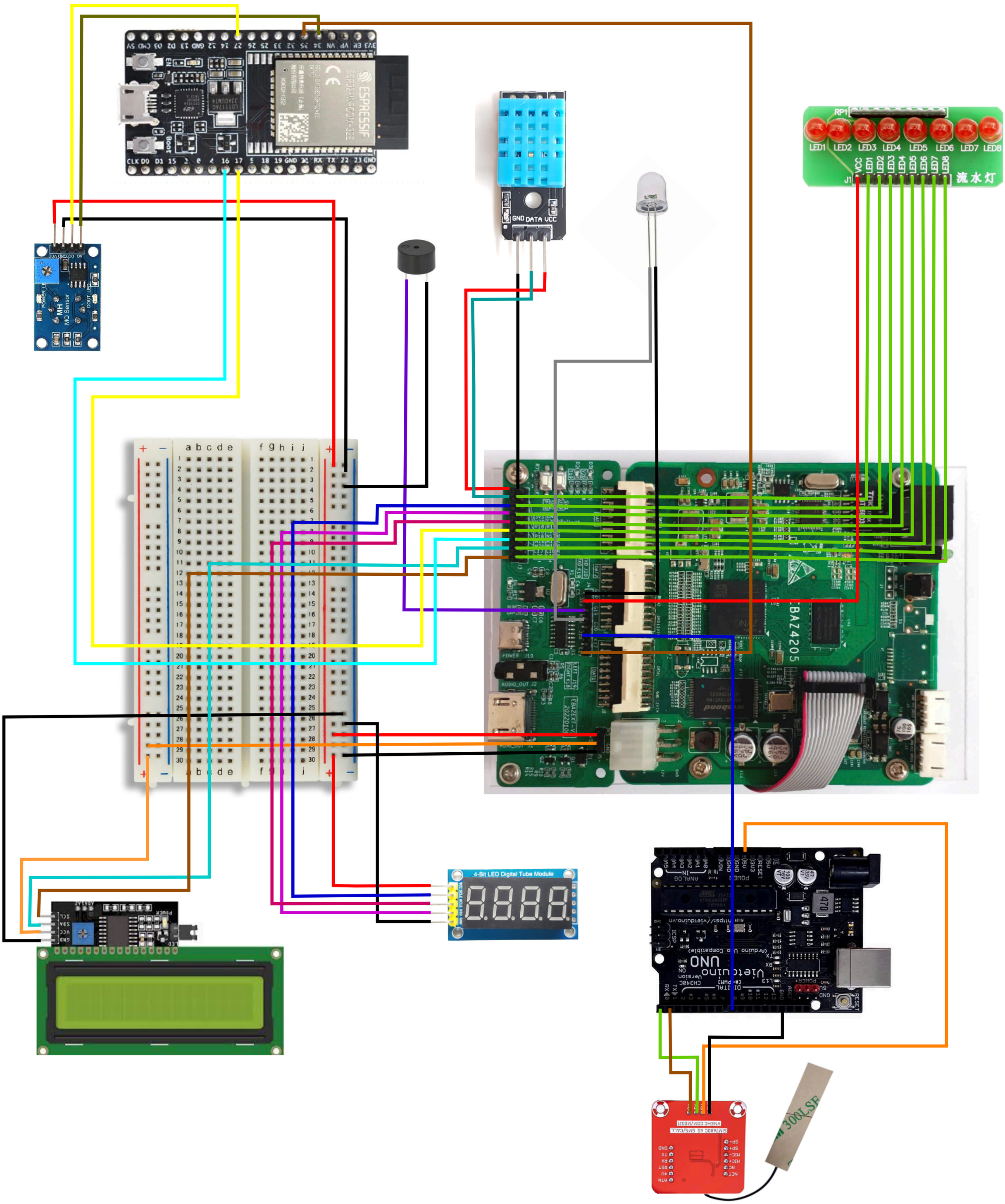
ESP32-WROOM-32E
MQ Sensor
GND DATA VCC
RP1
LED1 LED2 LED3 LED4 LED5 LED6 LED7 LED8
流水灯
4-Bit LED Digital Tube Module
Vietduino UNO
300LSF

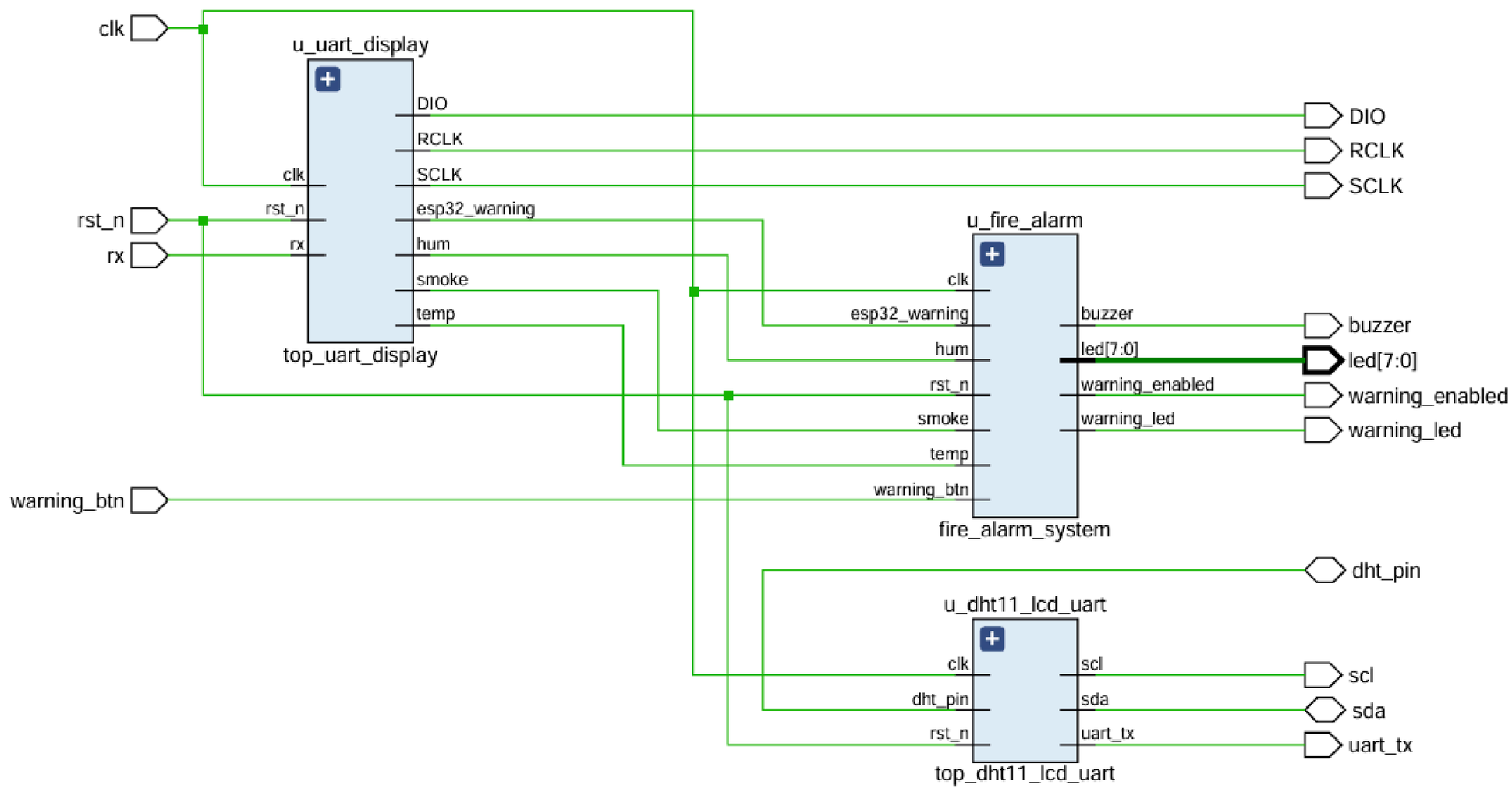
clk
u_uart_display
DIO
RCLK
SCLK
clk
rst_n
rx
esp32_warning
hum
smoke
temp
top_uart_display
rst_n
rx
DIO
RCLK
SCLK
u_fire_alarm
clk
esp32_warning
hum
rst_n
smoke
temp
warning_btn
buzzer
led[7:0]
warning_enabled
warning_led
fire_alarm_system
buzzer
led[7:0]
warning_enabled
warning_led
warning_btn
dht_pin
u_dht11_lcd_uart
clk
dht_pin
rst_n
scl
sda
uart_tx
top_dht11_lcd_uart
scl
sda
uart_tx

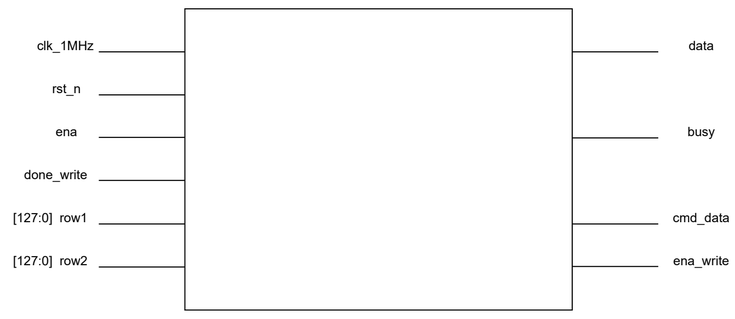
clk_1MHz
rst_n
ena
done_write
[127:0] row1
[127:0] row2
data
busy
cmd_data
ena_write

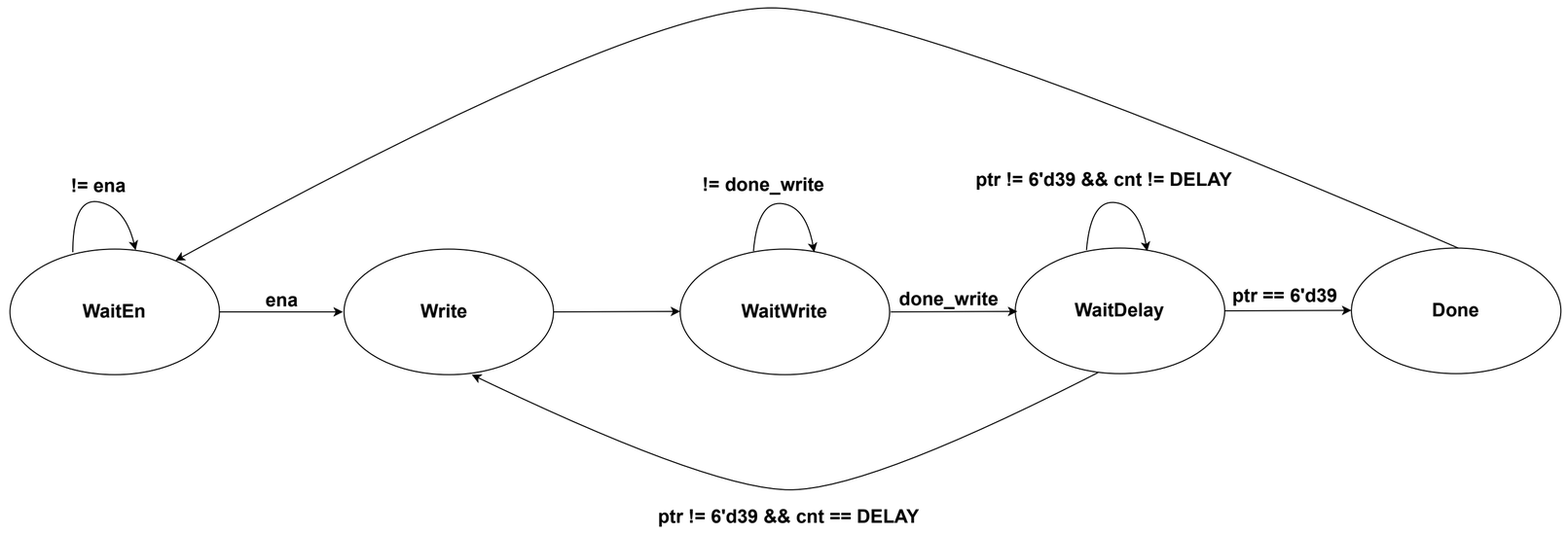
!= ena
!= done_write
ptr != 6'd39 && cnt != DELAY
WaitEn
ena
Write
WaitWrite
done_write
WaitDelay
ptr == 6'd39
Done
ptr != 6'd39 && cnt == DELAY

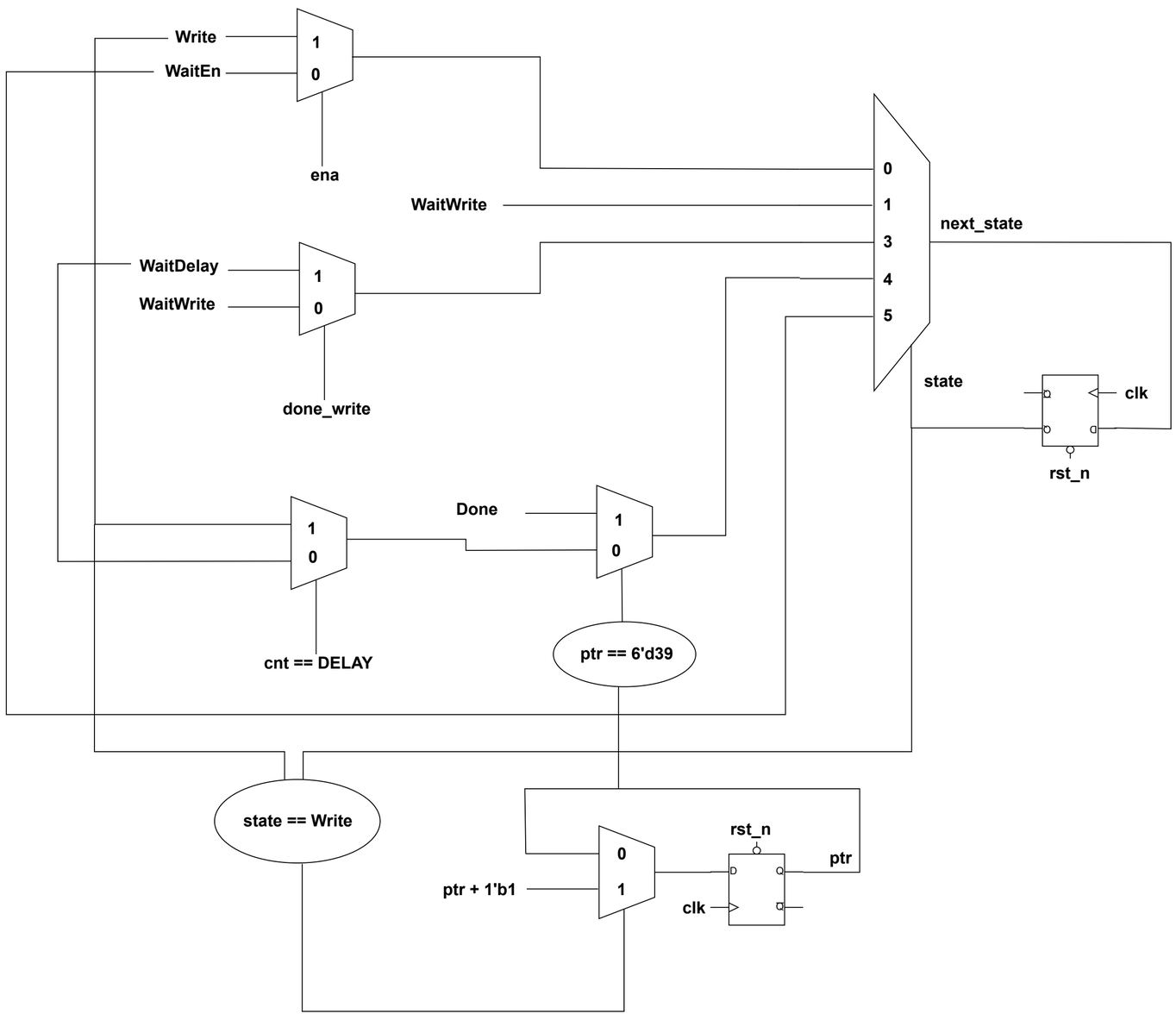
Write
WaitEn
1
0
ena
WaitWrite
0
1
3
4
5
next_state
WaitDelay
WaitWrite
1
0
done_write
state
clk
rst_n
Done
1
0
1
0
cnt == DELAY
ptr == 6'd39
state == Write
rst_n
ptr
0
1
ptr + 1'b1
clk