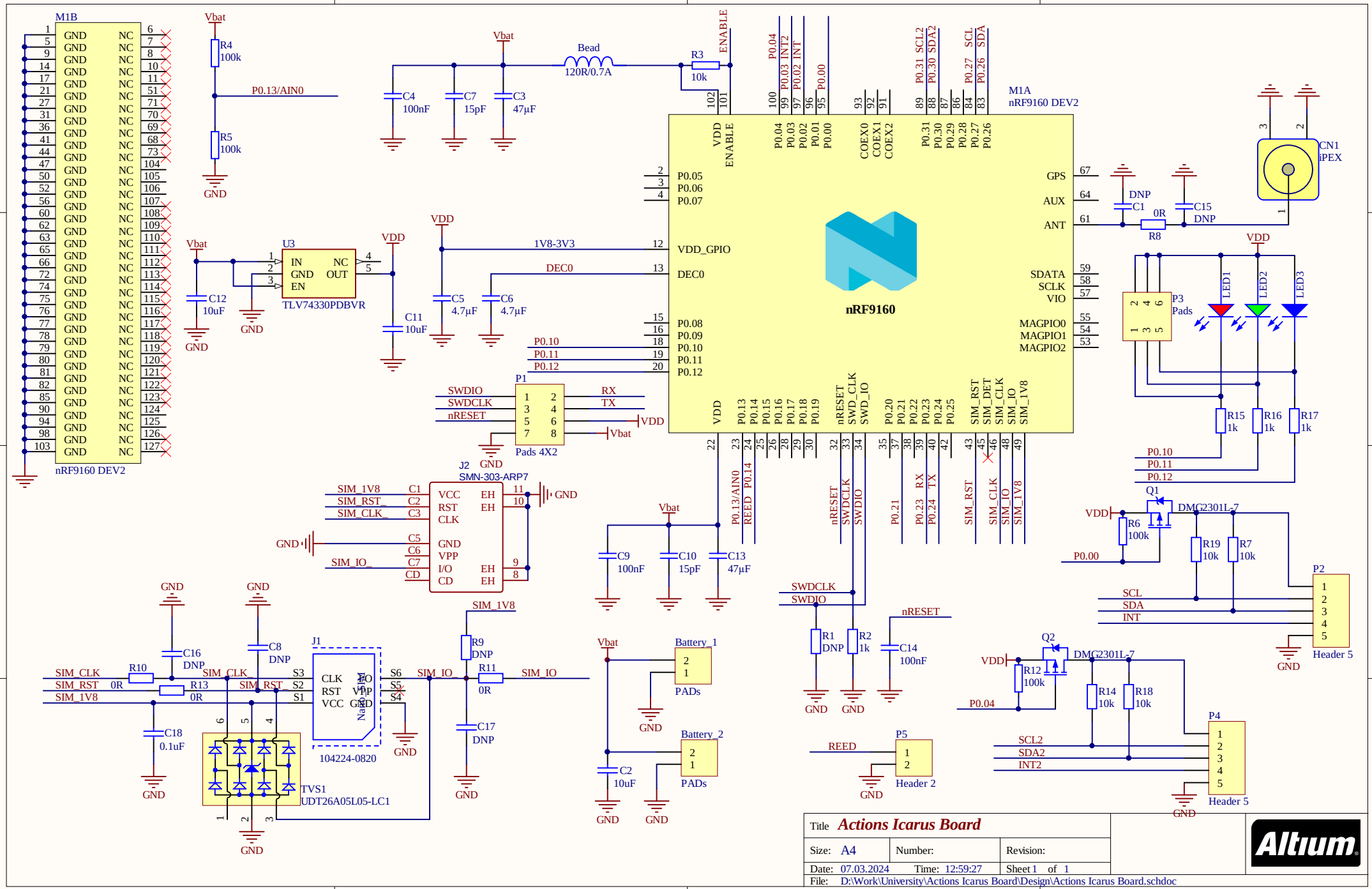
M1B
nRF9160 DEV2
M1A
nRF9160 DEV2
nRF9160
Vbat
R4
100k
R5
100k
P0.13/AIN0
GND
C4
100nF
C7
15pF
C3
47µF
Bead
120R/0.7A
R3
10k
ENABLE
U3
TLV74330PDBVR
IN
GND
EN
NC
OUT
C12
10uF
C11
10uF
VDD
1V8-3V3
DEC0
C5
4.7µF
C6
4.7µF
P0.10
P0.11
P0.12
P1
Pads 4X2
SWDIO
SWDCLK
nRESET
RX
TX
J2
SMN-303-ARP7
VCC
RST
CLK
GND
VPP
I/O
CD
EH
SIM_1V8
SIM_RST_
SIM_CLK_
SIM_IO_
C9
100nF
C10
15pF
C13
47µF
P0.13/AIN0
REED
P0.14
nRESET
SWDCLK
SWDIO
P0.21
P0.23
RX
P0.24
TX
SIM_RST
SIM_CLK
SIM_IO
SIM_1V8
GPS
AUX
ANT
DNP
C1
0R
R8
C15
DNP
CN1
iPEX
SDATA
SCLK
VIO
MAGPIO0
MAGPIO1
MAGPIO2
P3
Pads
LED1
LED2
LED3
R15
1k
R16
1k
R17
1k
Q1
DMG2301L-7
R6
100k
R19
10k
R7
10k
P2
Header 5
SCL
SDA
INT
C16
DNP
C8
DNP
R10
0R
R13
0R
C18
0.1uF
J1
104224-0820
TVS1
UDT26A05L05-LC1
R9
DNP
R11
0R
C17
DNP
Battery_1
Battery_2
PADs
C2
10uF
R1
DNP
R2
1k
C14
100nF
Q2
R12
100k
R14
10k
R18
10k
P4
SCL2
SDA2
INT2
P5
Header 2
Title
Actions Icarus Board
Size: A4
Number:
Revision:
Date: 07.03.2024
Time: 12:59:27
Sheet 1 of 1
File: D:\Work\University\Actions Icarus Board\Design\Actions Icarus Board.schdoc
Altium

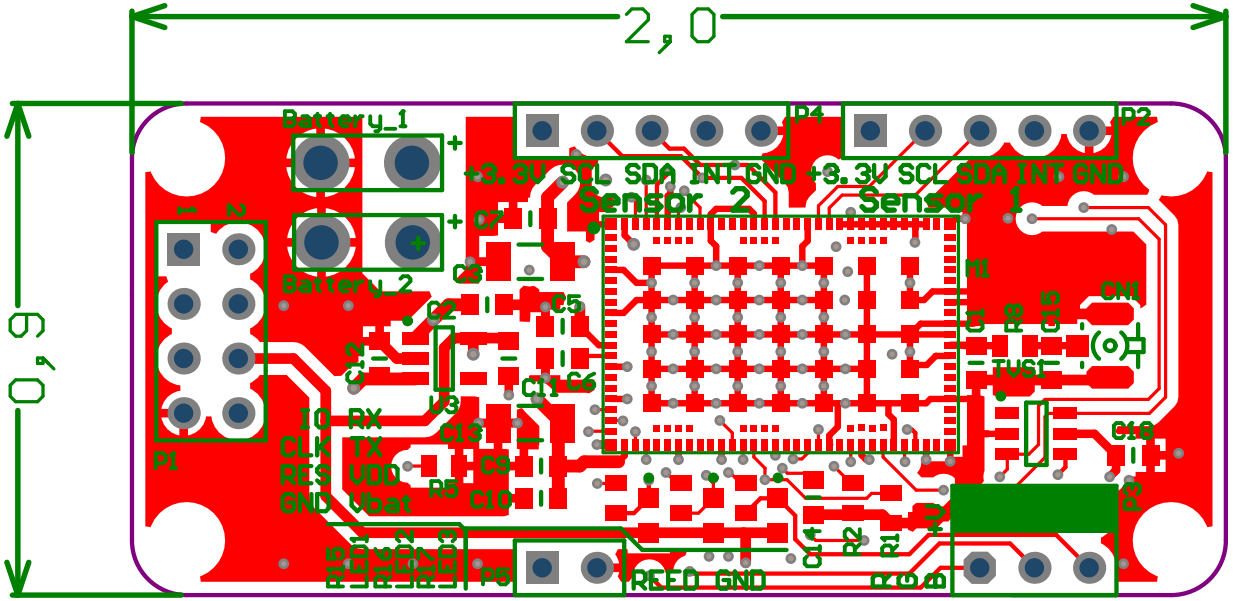
2,0
0,9
Battery_1
Battery_2
P1
P4
P2
P6
P3
+3.3V SCL SDA INT GND
Sensor 2
+3.3V SCL SDA INT GND
Sensor 1
IO RX
CLK TX
RES VDD
GND Vbat
REED GND
M1
CN1
TVS1
U3
C2
C3
C5
C6
C7
C8
C9
C10
C11
C13
C14
C15
C16
C17
C18
R1
R2
R5
R8
R9
R15
R16
R17
R18

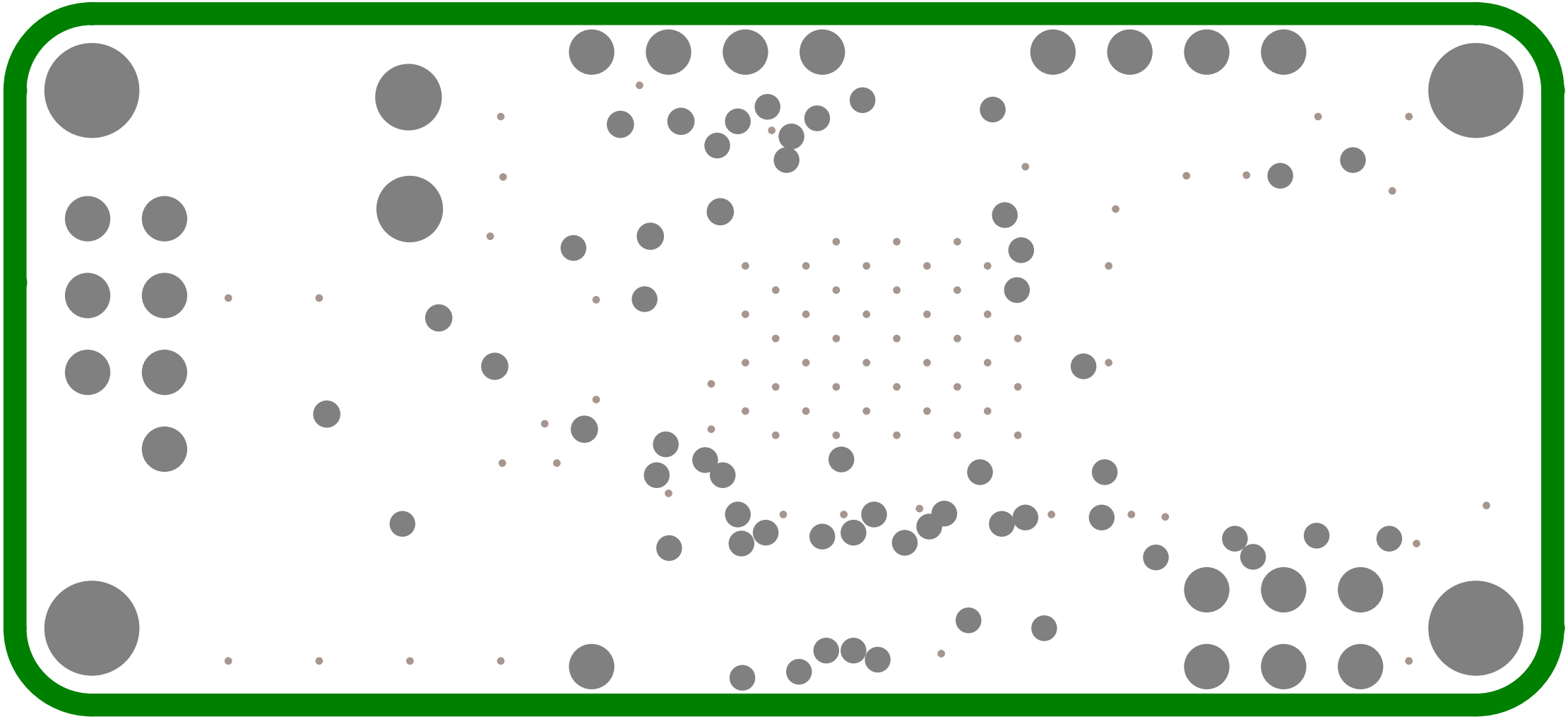

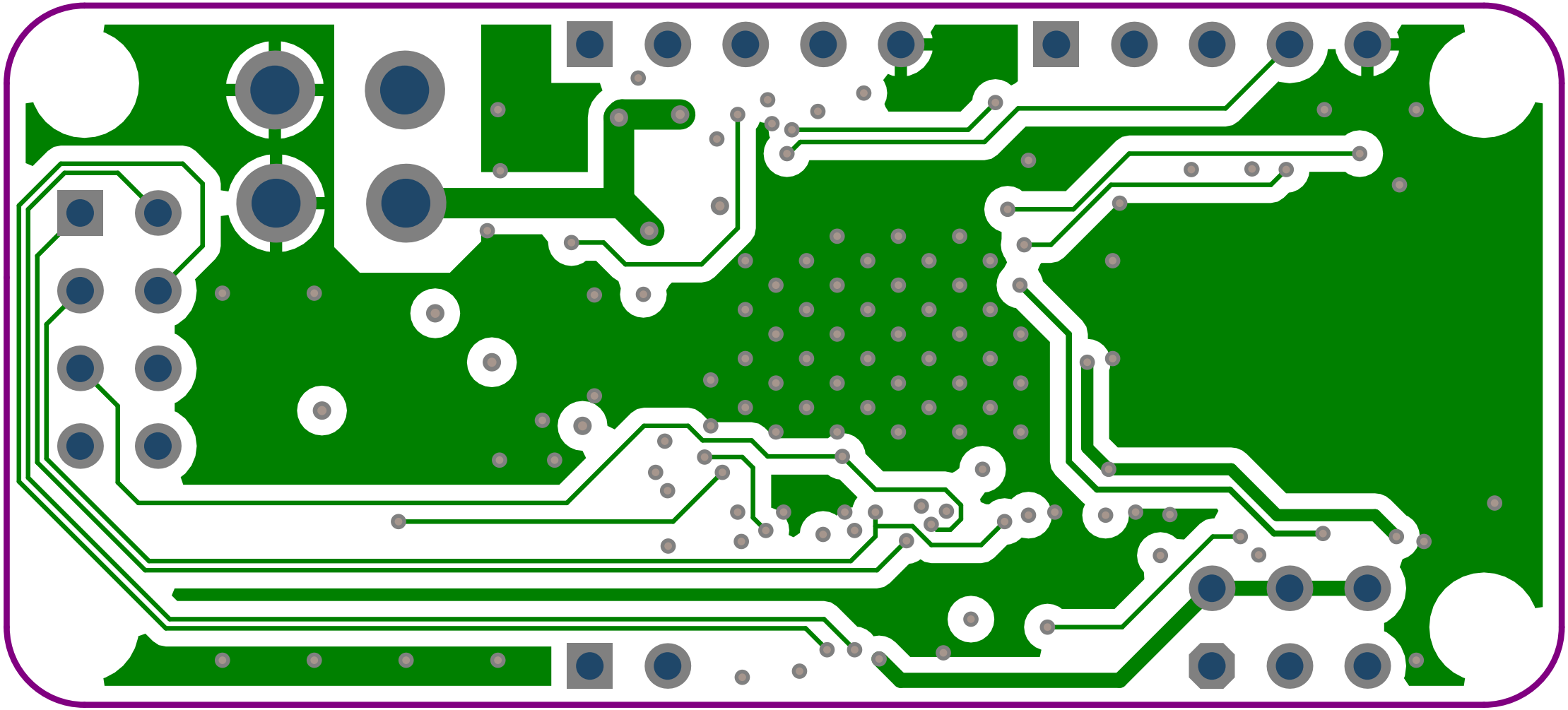

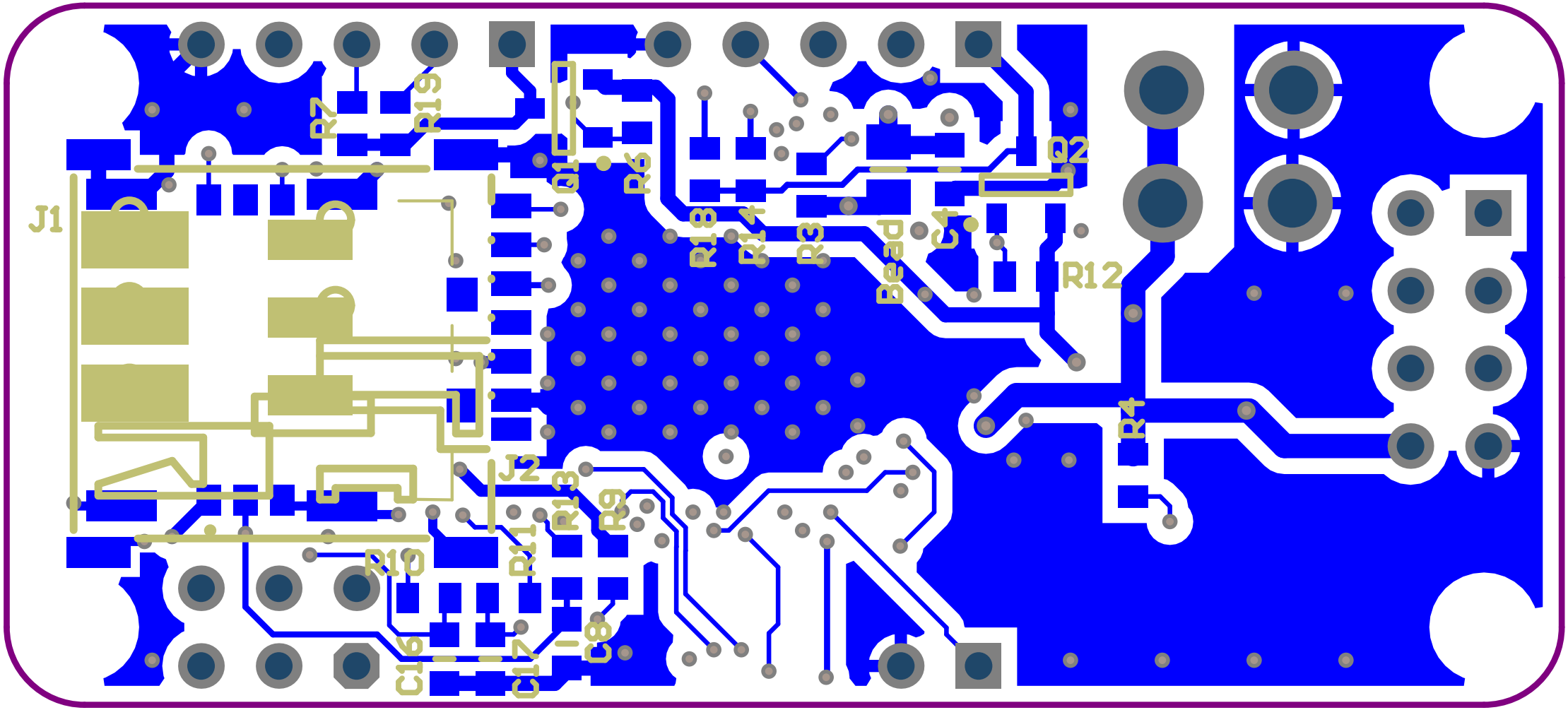
J1
R7
R19
Q1
R6
R18
R14
R3
Bead
C4
Q2
R12
R4
J2
R13
R9
R11
R10
C16
C17
C8

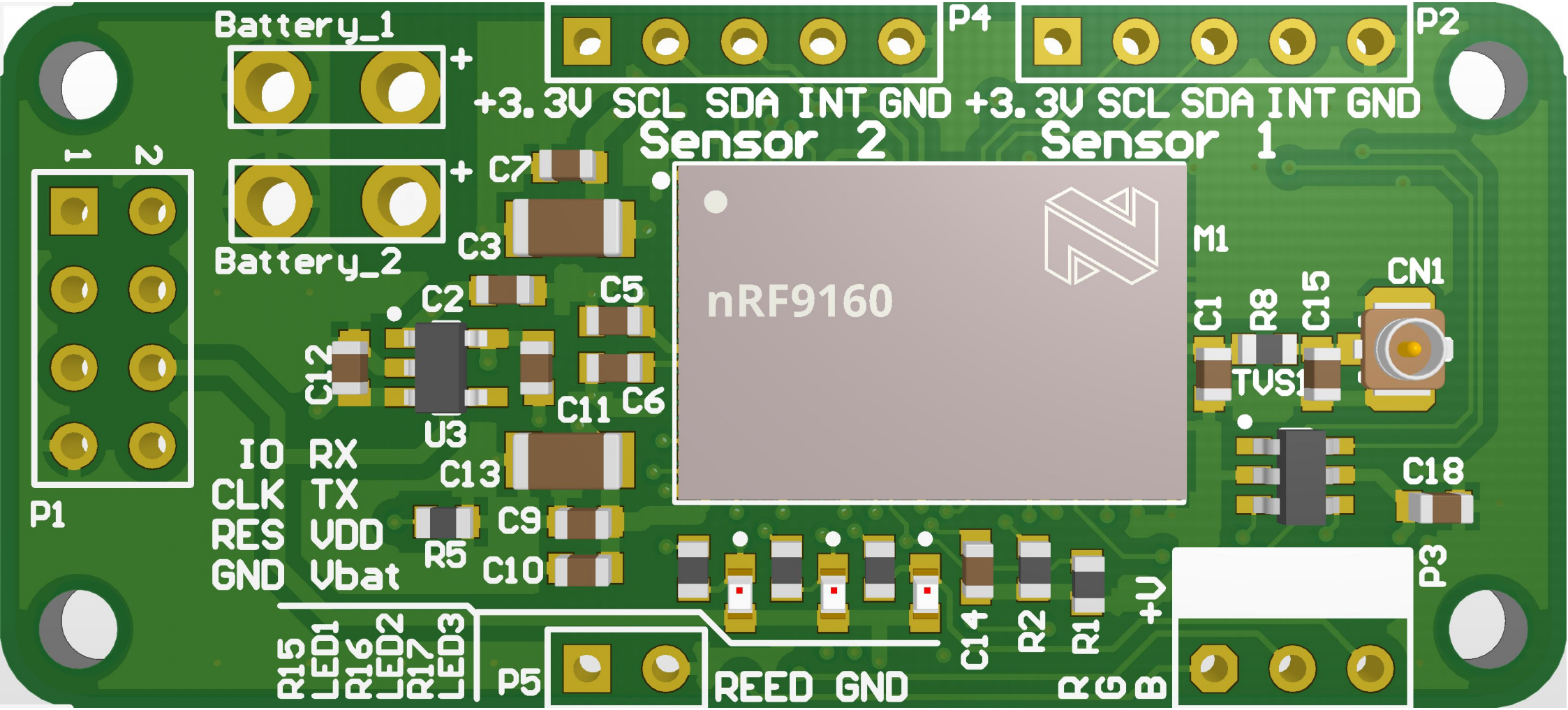
Battery_1
+
Battery_2
+
P4
+3.3V SCL SDA INT GND
Sensor 2
P2
+3.3V SCL SDA INT GND
Sensor 1
1
2
P1
C7
C3
C2
C5
C12
U3
C11
C6
C13
C9
C10
R5
IO RX
CLK TX
RES VDD
GND Vbat
M1
nRF9160
C1
R8
C15
CN1
TVS1
C18
P3
C14
R2
R1
+V
R G B
R15 LED1
R16 LED2
R17 LED3
P5
REED GND

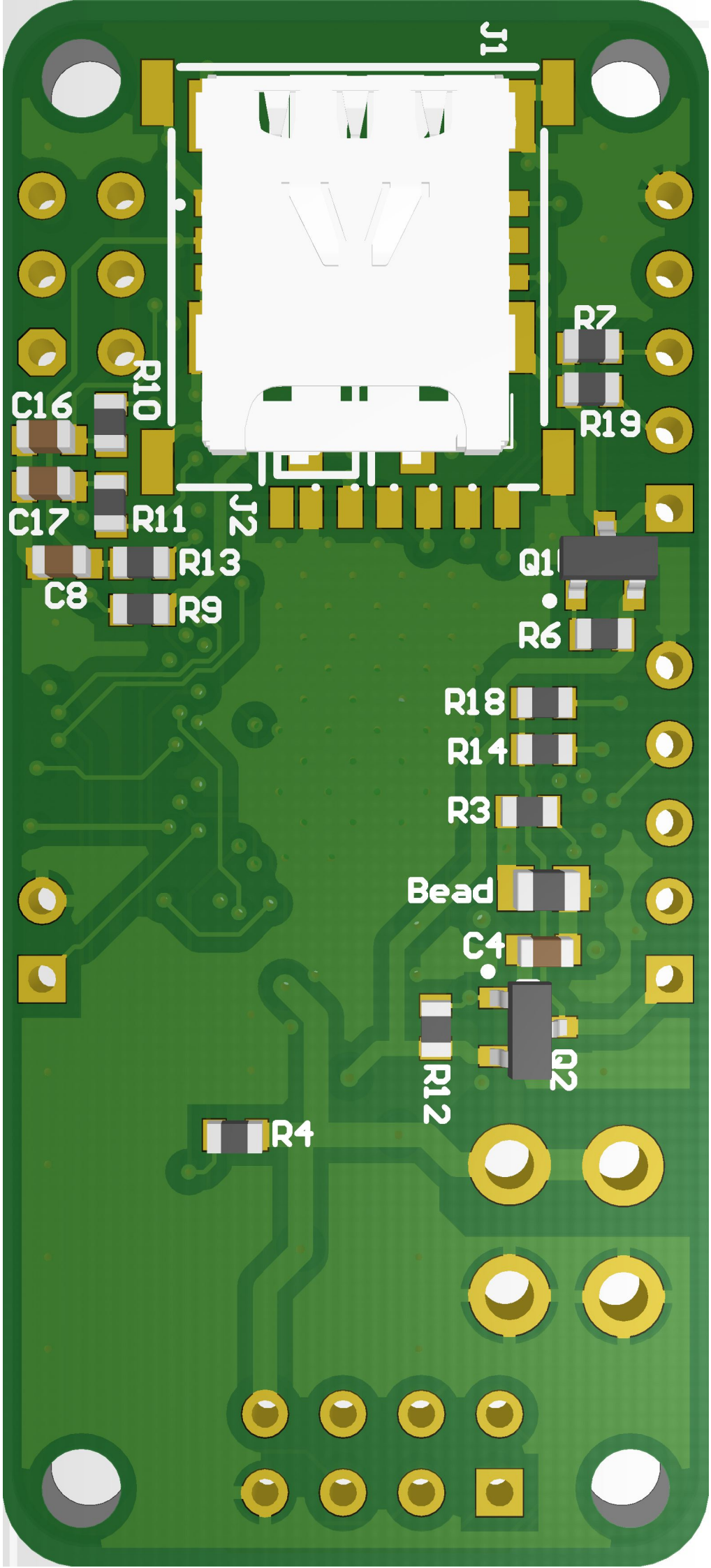
J1
R7
R19
R10
C16
C17
R11
J2
R13
C8
R9
Q1
R6
R18
R14
R3
Bead
C4
Q2
R12
R4

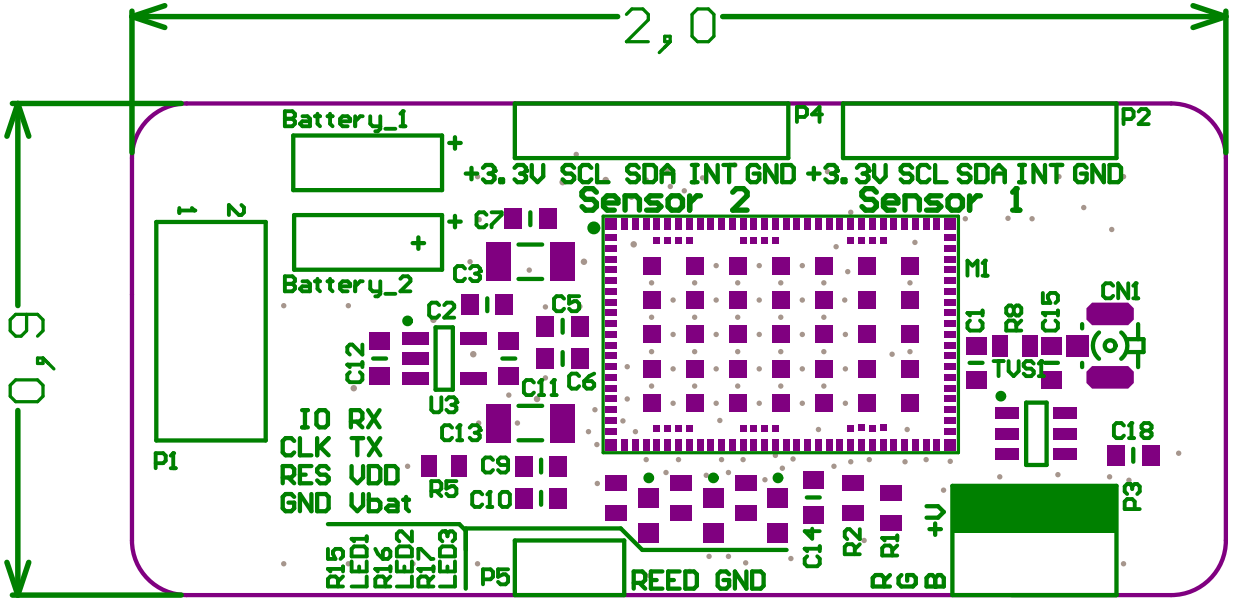
2,0
0,6
Battery_1
Battery_2
P1
1
2
P4
P2
+3.3V SCL SDA INT GND
+3.3V SCL SDA INT GND
Sensor 2
Sensor 1
C7
C3
C2
C5
C12
C11
C6
U3
C13
C9
C10
R5
M1
C1
R8
C15
CN1
TVS1
C18
P3
IO RX
CLK TX
RES VDD
GND Vbat
R15
LED1
R16
LED2
R17
LED3
P5
REED GND
C14
R2
R1
+V
R G B

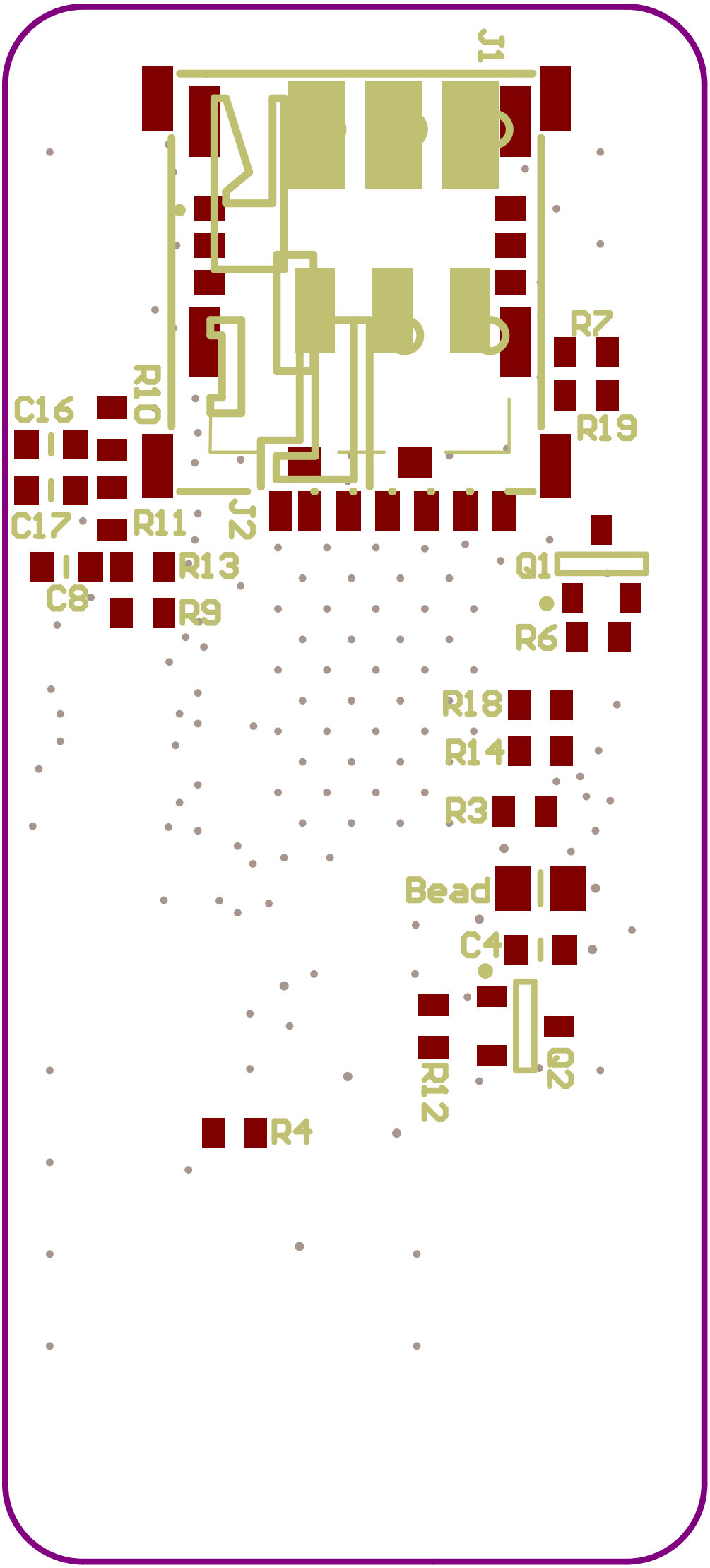
J1
R7
R19
R10
C16
C17
R11
J2
R13
C8
R9
Q1
R6
R18
R14
R3
Bead
C4
R12
Q2
R4