1 Cover Page.SchDoc

AK MCU KIT 2.3- STM32L151

Page	Index
1	COVER PAGE (this page)
2	BLOCK DIAGRAM
3	POWER
4	RS485
5	LCD
6	CONNECTORS
7	MCU
8	REVISION HISTORY

View Top Side

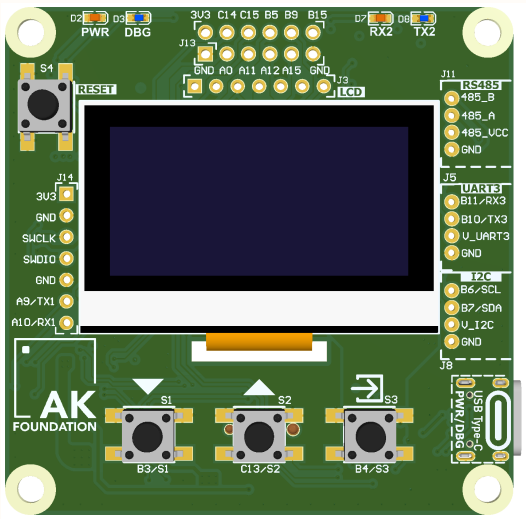

View Bottom Side

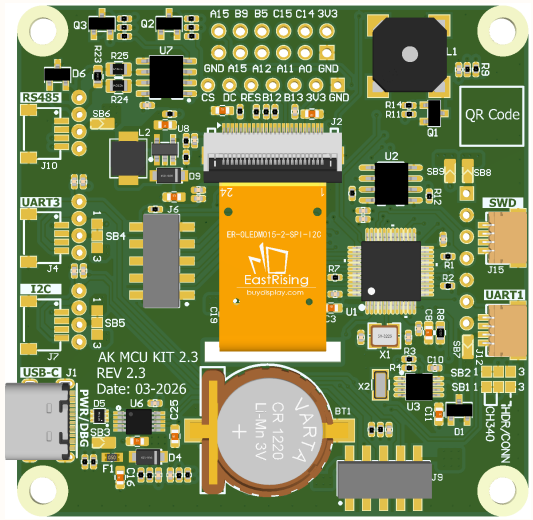

PCB Dimensions: 60*60mm

PCB Thickness: 1.6mm

AK MCU KIT 2.3		
Title: AK MCU KIT 2I3.PrjPcb		
Page Contents: Cover page		
Size: A3	DWG NO	Revision: 2.3
Date: 08/2024		Sheet 1 of 8

2 Block Diagram.SchDoc

View Top Side

[1]	MCU Reset button
[2][3]	LED Power, LED Debug
[4]	MCU Pinout
[5][6]	RS485 LED TX,RX
[7]	Grove RS485
[8]	Grove UART3
[9]	Grove I2C
[10][11][12]	User button switch
[13]	Debug Header 2.54mm
[14]	LCD Oled 1.54" SSD1309

View Top Side

[15]	Qwiic RS485
[16]	Qwiic UART3
[17]	Qwiic I2C
[18]	USB Type-C Console & Power
[19][21]	Connector for Expansion Board
[20]	CR1220 Battery for RTC
[23][25]	Qwiic Debug connector
[10][11][12]	User button switch
[24]	MCU STM32L
[26]	NOR FLASH
[27]	Buzzer
[22][27][29]	Solder Jumper

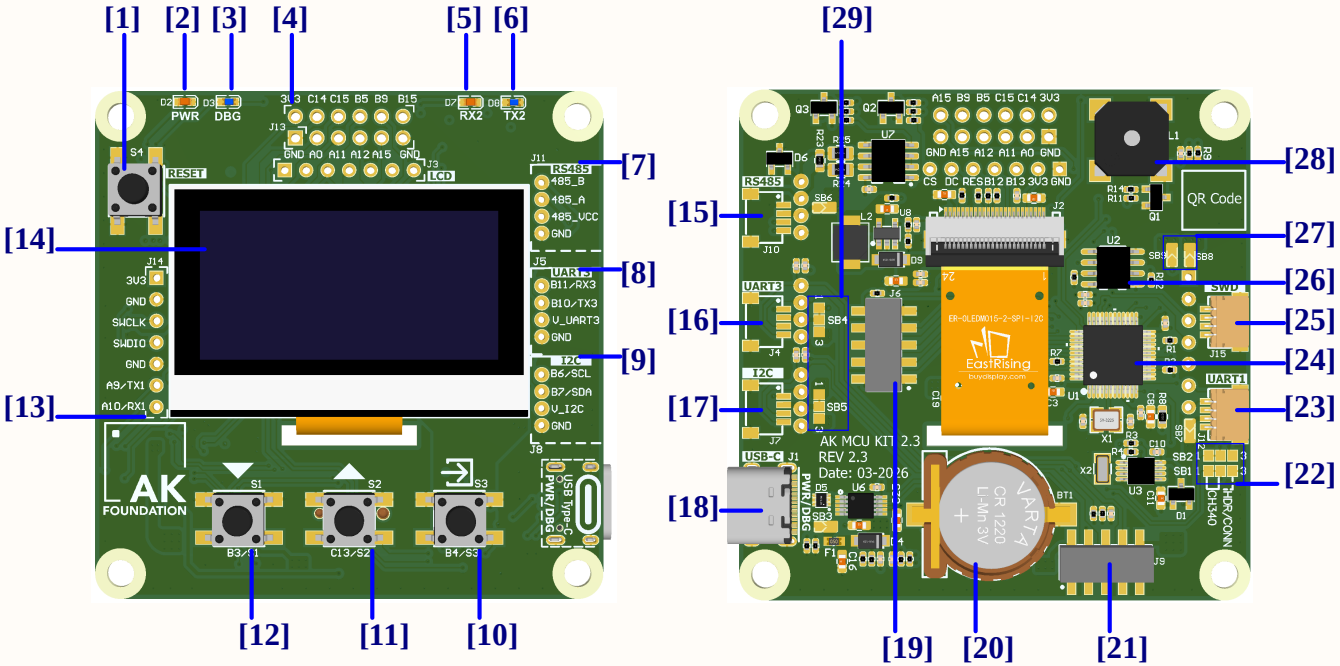

AK FOUNDATION

AK MCU KIT 2.3	
Title:	AK MCU KIT 2I3.PrjPcb
Page Contents:	Block Daigram
Size: A3	DWG NO / Revision: 2.3
Date: 3/10/2026	Sheet 2 of 8

3 Power.SchDoc

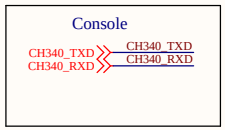

Power Tree

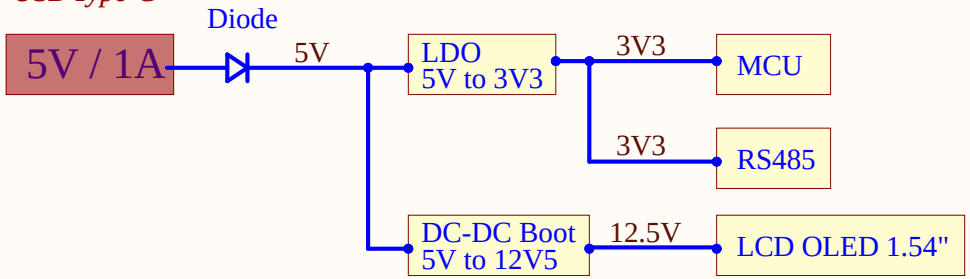

USB Type C

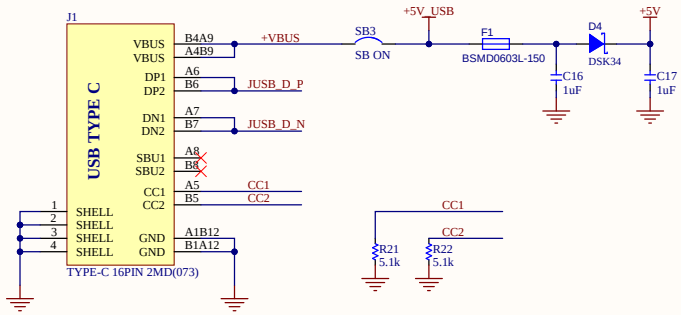

5v to 3v3@100mA MCU

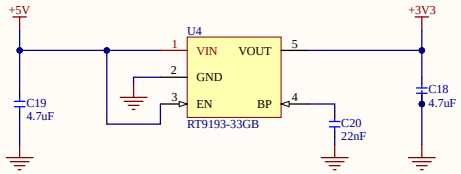

CH340E USB to TTL Console

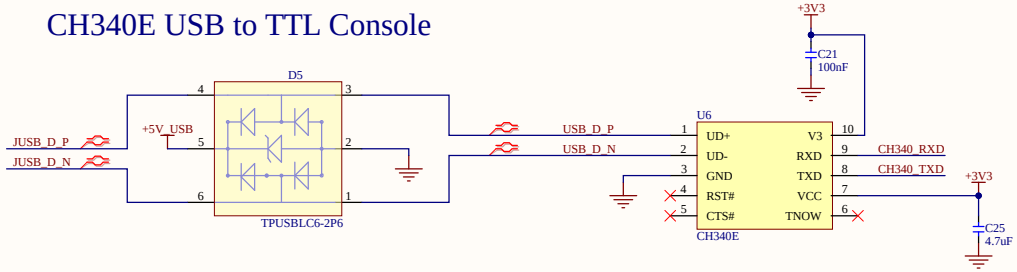

CH340 Power Use 3V3 System

3.2 mm non-plated mounting hole for M3 screw

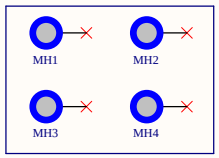

Logo AK

Logo USB-Type-C

AK MCU KIT 2.3	
Title: AK MCU KIT 2I3.PrjPcb	
Page Contents: Power	
Size:	DWG NO	Revision: 2.3
Date: 11:04:51 AM 3/10/2026	Sheet 3 of 8

4 RS485.SchDoc

[4][7]RS485

RS485_TX — RS485_TX
RS485_RX — RS485_RX
RS485_DIR — RS485_DIR

[4][6]RS485

RS485_A — RS485_A
RS485_B — RS485_B

RS-485 Transceiver (MCU USART2)

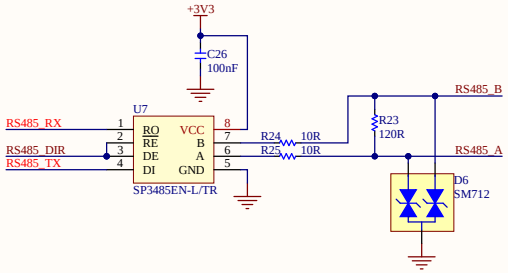

RS485 TX,RX LED Indicator

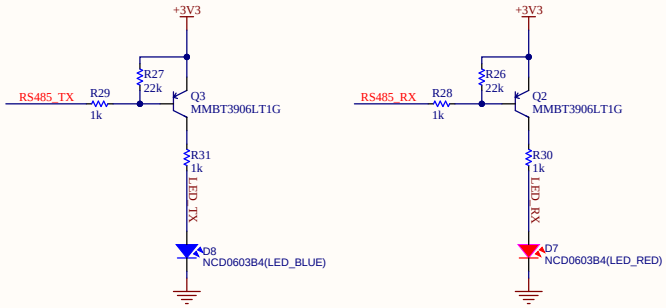

AK FOUNDATION

AK MCU KIT 2.3	
Title:	AK MCU KIT 2I3.PrjPcb
Page Contents:	RS485
Size:	DWG NO / Revision: 2.3
Date: 11:04:51 AM 3/10/2026	Sheet 4 of 8

5 LCD.SchDoc

[5][7]LCD

LCD_SDA — LCD_SDA
LCD_SCL — LCD_SCL

FPC 24pin Contacts Top and Bottom (LCD Contact Top)

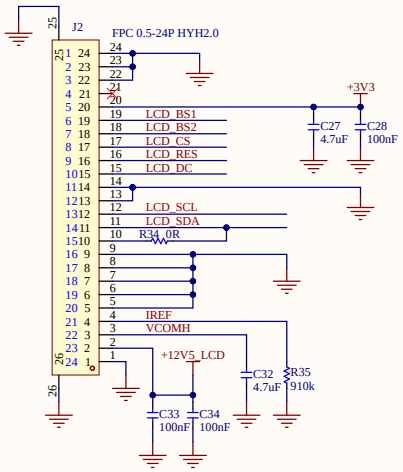

1.54inch LCD OLED - Driver SSD1309

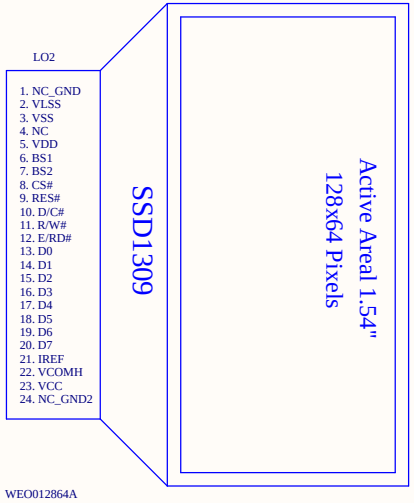

12.5V Boost Supply for OLED Panel

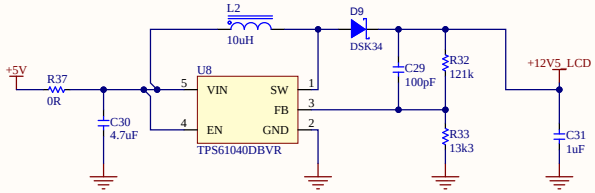

BS1 to VCC, BS2 to GND : I2C mode

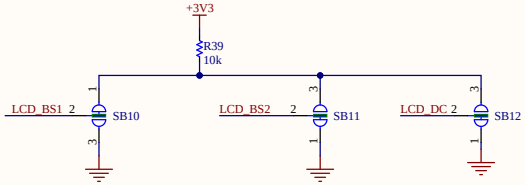

Header 2.54 1*7 (OLED_LCD pinout)

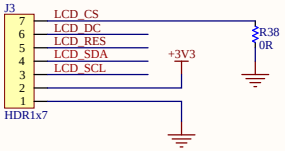

D/C tied to GND (I2C mode)

I2C Address: 0x3C

AK FOUNDATION

AK MCU KIT 2.3		
Title: AK MCU KIT 2I3.PrjPcb		
Page Contents: LCD		
Size:	DWG NO *	Revision: 2.3
Date: 11:04:51 AM 3/10/2026	Sheet 5 of 8	

6 Connectors.SchDoc

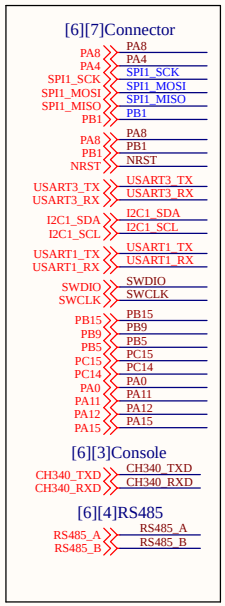

Qwiic connector 1.0mm(SparkFun)

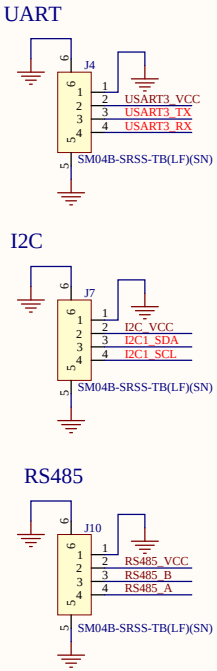

Grove connector 2.0mm(Seeed Studio)

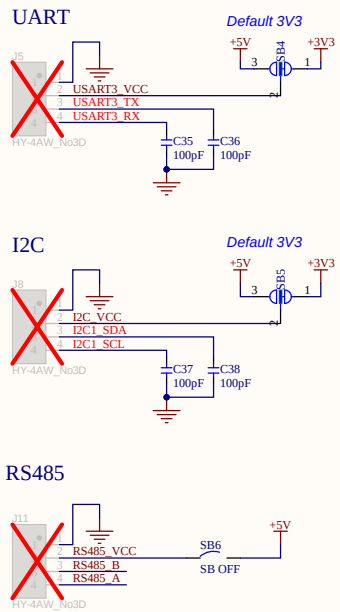

Connector for Expansion Board

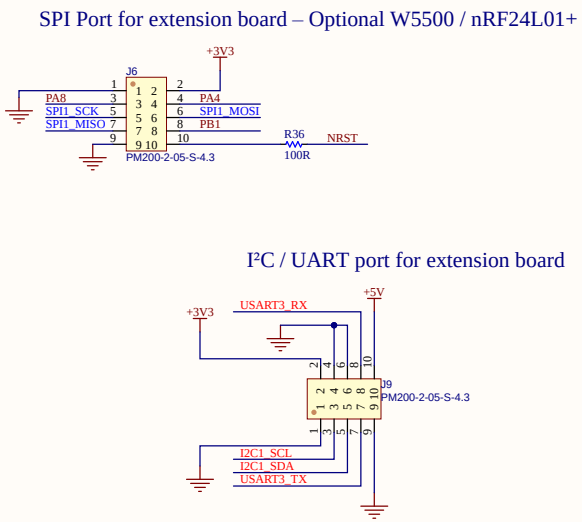

Debug Connector

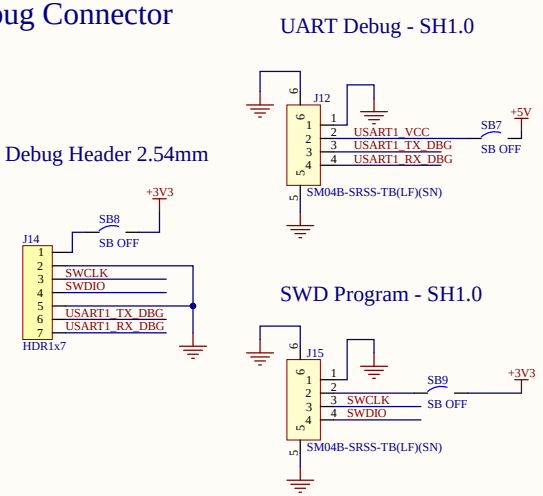

Solder Bridge UART Console

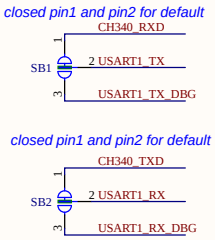

MCU Pinout 2.54mm 2*6 pin

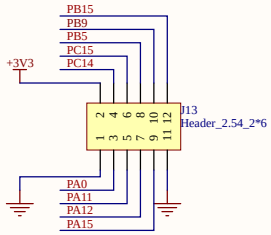

AK FOUNDATION

AK MCU KIT 2.3	
Title: AK MCU KIT 2I3.PrjPcb	
Page Contents: Connectors	
Size:	DWG NO * / Revision: 2.3
Date: 11:04:51 AM 3/10/2026	Sheet 6 of 8

7 MCU.SchDoc

[7][4]RS485
RS485_TX — RS485_TX
RS485_RX — RS485_RX
RS485_DIR — RS485_DIR

[7][5]LCD
LCD_SDA — LCD_SDA
LCD_SCL — LCD_SCL

[7][6]Connector
PA8 — PA8
PA4 — PA4
SPI1_SCK — SPI1_SCK
SPI1_MOSI — SPI1_MOSI
SPI1_MISO — SPI1_MISO
PB1 — PB1
PA8 — PA8
PB1 — PB1
NRST — NRST
USART3_TX — USART3_TX
USART3_RX — USART3_RX
I2C1_SDA — I2C1_SDA
I2C1_SCL — I2C1_SCL
USART1_TX — USART1_TX
USART1_RX — USART1_RX
SWDIO — SWDIO
SWCLK — SWCLK
PB15 — PB15
PB9 — PB9
PB5 — PB5
PC15 — PC15
PC14 — PC14
PA0 — PA0
PA11 — PA11
PA12 — PA12
PA15 — PA15

STM32L151CBT6

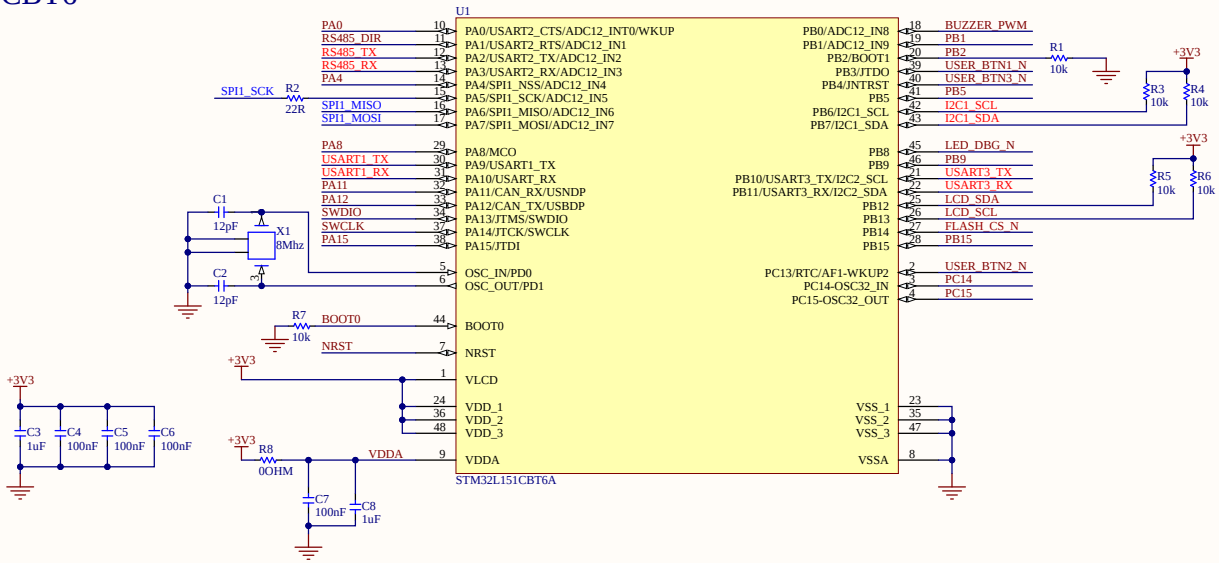

Led & Buzzer

LED Power (Red)

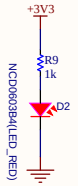

LED Debug (Blue)

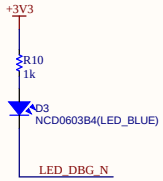

Buzzer PWM

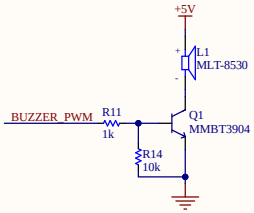

RTC PCF85063

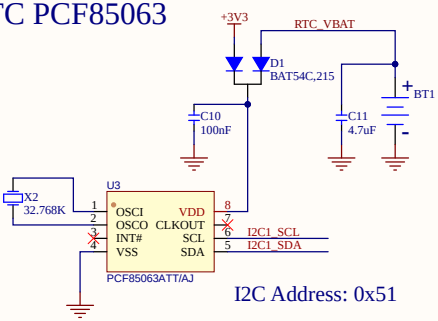

I2C Address: 0x51

NOR Flash

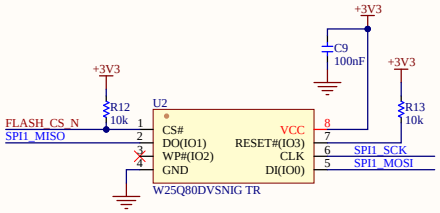

Button

User Button

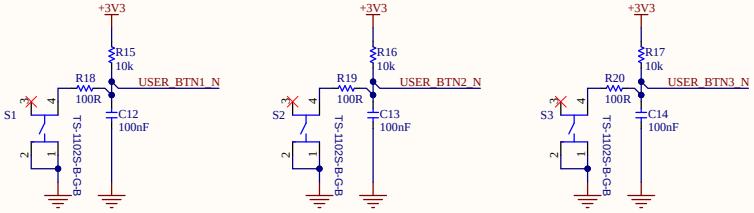

MCU Reset Button

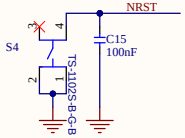

AK FOUNDATION

Title:	AK MCU KIT 2I3.PrjPcb
Page Contents:	MCU
Size:	DWG NO *
Revision:	2.3
Date:	11:04:51 AM 3/10/2026
Sheet	7 of 8

AK MCU KIT 2.3

8 Revision History.SchDoc

Revision

Rev #	Date	Originator	Rev Iteam ID	Description
Rev 2.3	10-March-2026	AnhHH	1 2	Initial Release DVT JLC Design for Manufacturing

AK FOUNDATION

AK MCU KIT 2.3		
Title: AK MCU KIT 2I3.PrjPcb		
Page Contents: Revision History		
Size: A3	DWG NO Hoang anh	Revision: 2.3
Date: 3/10/2026		Sheet 8 of 8

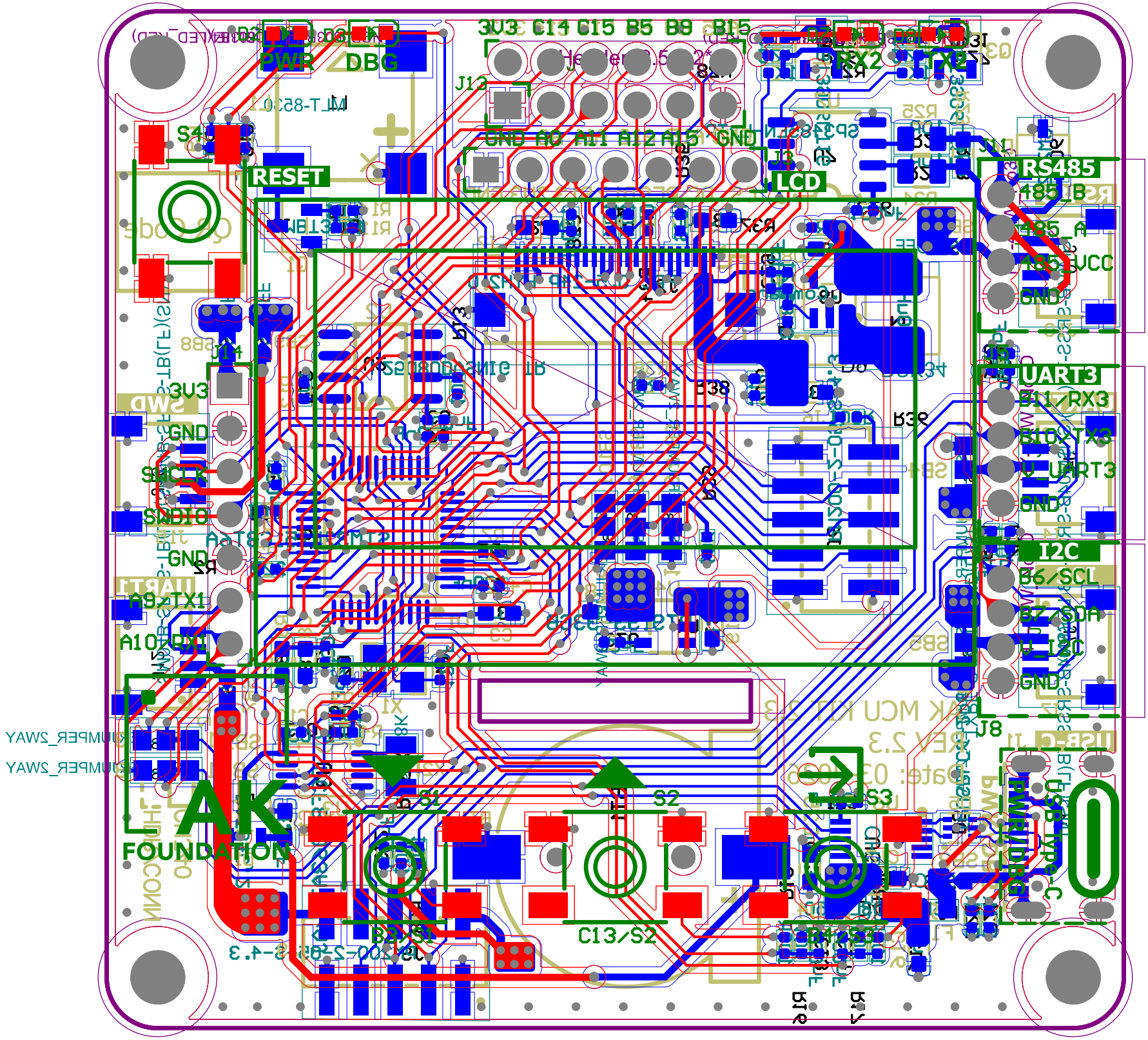
PWR
DBG
3V3 C14 C15 B5 B9 B15
TX2
RX2
GND A0 A1 A2 A15 GND
RESET
LCD
RS485
485_B
485_A
485_VCC
GND
UART3
B11/RX3
B10/TX3
U_UART3
GND
I2C
B6/SCL
B7/SDA
U_I2C
GND
3V3
GND
SWCLK
SWDIO
GND
A9/TX1
A10/RX1
S1
S2
S3
C13/S2
AK
FOUNDATION

AK MCU KIT 2I3.PrjPcb

	Comment	esign	Footprint	CSC Part Nu	Manufacturer Part Num	Manufacturer	Quan	Description	Assembly Typ	Link
1	CR1220-2ZX	BT1	BAT_CR1220_SMD	C969906	CR1220-2ZX	Q&J	1	SMD Battery Holders, C	SMT Assembly	
2	12pF	C1, C2	C_0402	C1547	0402CG120J500NT	FH (Guangdong Fenghua Adva	2	12pF 50V C0G ±5% 04	SMT Assembly	
3	1uF	C3, C8,	C_0603	C15849	CL10A105KB8NNNC	Samsung Electro-Mechanics	5	1UF 50V 0603 ROHS	SMT Assembly	
4	100nF	C4, C5,	C_0402	C41851	0402B104K160NT	FH(Guangdong Fenghua Adva	15	100nF 16V X7R ±10% 0	SMT Assembly	
5	4.7uF	C11, C1	C_0603	C19666	CL10A475KO8NNNC	Samsung Electro-Mechanics	7	4.7UF 16V 0603 ROHS	SMT Assembly	
6	22nF	C20	C_0402	C1532	0402B223K500NT	FH(Guangdong Fenghua Adva	1	22nF 50V X7R ±10% 04	SMT Assembly	
7	100pF	C29, C3	C_0402	C1546	0402CG101J500NT	FH(Guangdong Fenghua Adva	5	100pF 50V C0G ±5% 04	SMT Assembly	
8	BAT54C,215	D1	SOT-23-3_L2.9-W1.	C37704	BAT54C,215	Nexperia	1	SCHOTTKY BARRIER	SMT Assembly	
9	NCD0603B4(LED_R	D2, D7	LED0603-RD_RED	C89814	NCD0603B4	Foshan NationStar Optoelectro	2	LED Red 0603 Light En	SMT Assembly	
10	NCD0603B4(LED_B	D3, D8	LED0603-RD_BLUE	C84263	NCD0603R1	Foshan NationStar Optoelectro	2	LED Blue 0603 Light En	SMT Assembly	
11	DSK34	D4, D9	SOD-123_L2.8-W1.8	C41029	DSK34	MDD（Microdiode Electronics)	2	DSK34 40V 550mV@3A	SMT Assembly	
12	TPUSBLC6-2P6	D5	SOT-666-6_L1.6-W1	C2682291	TPUSBLC6-2P6	TECH PUBLIC(台舟)	1	TPUSBLC6-2P6 0.8pF	SMT Assembly	
13	SM712	D6	SOT-23-3_L2.9-W1.	C502564	SM712	MDD（Microdiode Electronics)	1	TVS DIODE 12V 21V S	SMT Assembly	
14	BSMD0603L-150	F1	F0603	C914094	BSMD0603L-150	BHFUSE	1	6V 1.5A 50A 1W -40℃~	SMT Assembly	
15	TYPE-C 16PIN 2MD(	J1	USB-C-SMD_TYPE-	C2765186	TYPE-C16PIN	SHOU HAN	1	5A 1 Surface Mount 16	SMT Assembly	
16	FPC 0.5-24P HYH2.0	J2	FPC-SMD_24P-P0.5	C6364666	FPC 0.5-24P HYH2.0	SHOU HAN(首韩)	1	24P 2mm 50V Double-S	SMT Assembly	
17	SM04B-SRSS-TB(LF	J4, J7, J	CONN-SMD_4P-P1.	C160404	SM04B-SRSS-TB(LF)(SN)	JST	5	1x4P 2.9mm 4 4.32mm	SMT Assembly	
18	PM200-2-05-S-4.3	J6, J9	HDR-SMD_10P-P2.0	C3975169	PM200-2-05-S-4.3	HCTL(华灿天禄)	2	SMD,P=2mm Female H	SMT Assembly	
19	MLT-8530	L1	BUZ-SMD_4P-L8.5-W	C94599	MLT-8530	Jiangsu Huaneng Elec	1	BUZZERS MAGNETIC I	SMT Assembly	
20	10uH	L2	IND-SMD_L4.4-W4.2	C408339	MWSA0402S-100MT	Sunlord	1	POWER INDUCTORS	SMT Assembly	
21	MMBT3904	Q1	SOT-23-3_L2.9-W1.	C20526	MMBT3904	Changjiang Electronics Tech (	1	MMBT3904 TRANSISTO	SMT Assembly	
22	MMBT3906LT1G	Q2, Q3	SOT-23-3_L2.9-W1.	C53444	MMBT3906LT1G	ON Semicon	2	MMBT3906 TRANSISTO	SMT Assembly	
23	10k	R1, R3,	R_0402	C25744	0402WGF1002TCE	Uniroyal Elec	13	10k 0402 62.5mW Thic	SMT Assembly	
24	22R	R2	R_0402	C25092	0402WGF220JTCE	Uniroyal Elec	1	22R 0402 62.5mW Thic	SMT Assembly	
25	0OHM	R8	R_0603	C21189	0603WAF0000T5E	Uniroyal Elec	1	0OHMS ±1% 1/10W 06	SMT Assembly	
26	1k	R9, R10	R_0402	C11702	0402WGF1001TCE	Uniroyal Elec	7	1kΩ 0402 62.5mW Thic	SMT Assembly	
27	100R	R18, R1	R_0402	C25076	0402WGF1000TCE	Uniroyal Elec	4	100R 0402 50V Chip R	SMT Assembly	
28	5.1k	R21, R2	R_0402	C25941	0402WGJ0512TCE	Uniroyal Elec	2	5.1KOHMS ±5% 1/16W	SMT Assembly	
29	120R	R23	R_0603	C22787	0603WAF1200T5E	UNI-ROYAL(Uniroyal Elec)	1	120 OHMS ±1% 1/10W	SMT Assembly	
30	10R	R24, R2	R_0805	C17415	0805W8F100JT5E	Uniroyal Elec	2	10OHMS ±1% 1/8W 08	SMT Assembly	
31	22k	R26, R2	R_0402	C25768	0402WGF2202TCE	Uniroyal Elec	2	22k 0402 62.5mW Thic	SMT Assembly	
32	121k	R32	R_0402	C11693	0402WGF1213TCE	Uniroyal Elec	1	121k 0402 ±1% chip res	SMT Assembly	
33	13k3	R33	R_0402	C274352	RC0402FR-0713K3L	YAGEO	1	13k3 13.3k 0402 ±1% c	SMT Assembly	
34	0R	R34, R3	R_0402	C17168	0402WGF0000TCE	Uniroyal Elec	3	0R 0402 ±1% 50V Chip	SMT Assembly	
35	910k	R35	R_0402	C163435	RC0402JR-07910KL	YAGEO	1	910k 0402 ±5% 50V chi	SMT Assembly	
36	TS-1102S-B-G-B	S1, S2,	SW-SMD_4P-L6.0-W	C381064	TS-1102S-C-F-B	XKB Connectivity	4	Botton SMD TACTILE S	SMT Assembly	
37	STM32L151CBT6A	U1	LQFP-48_L7.0-W7.0	C604847	STM32L151CBT6A	STMicroelectronics	1	STM32 ARM-based 32-	SMT Assembly	
38	W25Q80DVSNIG TR	U2	SOIC-8_L5.0-W4.0-P	C401655	W25Q80DVSNIG TR	Winbond(华邦)	1	W25Q80DVSNIG -40℃	SMT Assembly	
39	PCF85063ATT/AJ	U3	TSSOP-8_L3.0-W3.	C165608	PCF85063ATT/AJ	NXP	1	TSSOP-8-3.0mm Real-	AMT Assembly	
40	RT9193-33GB	U4	SOT-23-5_L3.0-W1.	C15651	RT9193-33GB	Richtek Tech	1	5.5V 300mV @ 300mA	SMT Assembly	
41	CH340E	U6	MSOP-10_L3.0-W3.0-P0.50-LS5.0-BL			WCH(Jiangsu Qin Heng)	1	Transceiver USB 2.0 2M	SMT Assembly	
42	SP3485EN-L/TR	U7	SOIC-8_3.9x4.9x1.27	C8963	SP3485EN-L/TR	MaxLinear	1	SP3485EN-L/TR -40℃-	SMT Assembly	
43	TPS61040DBVR	U8	SOT-23-5_L3.0-W1.	C7722	TPS61040DBVR	Texas Instruments	1	TPS6104x Low-Power	SMT Assembly	
44	8Mhz	X1	SMD-3225_4P	C133366	1C208000CE0Q	KDS Daishinku	1	10pF 8MHz Crystal Osc	SMT Assembly	
45	32.768K	X2	SMD-3215_2P	C32346	Q13FC13500004	Seiko Epson	1	-40℃~+85℃ 12.5pF 32	SMT Assembly	