REVISIONS				
ZONE	REV	DESCRIPTION	DATE	APPROVED

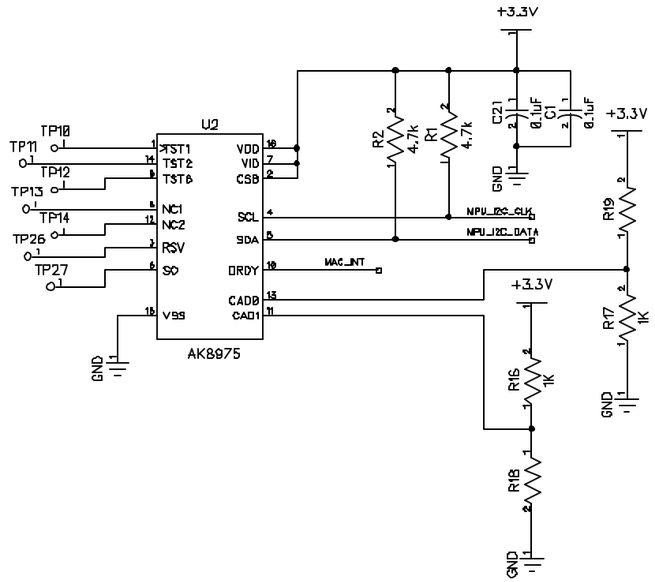

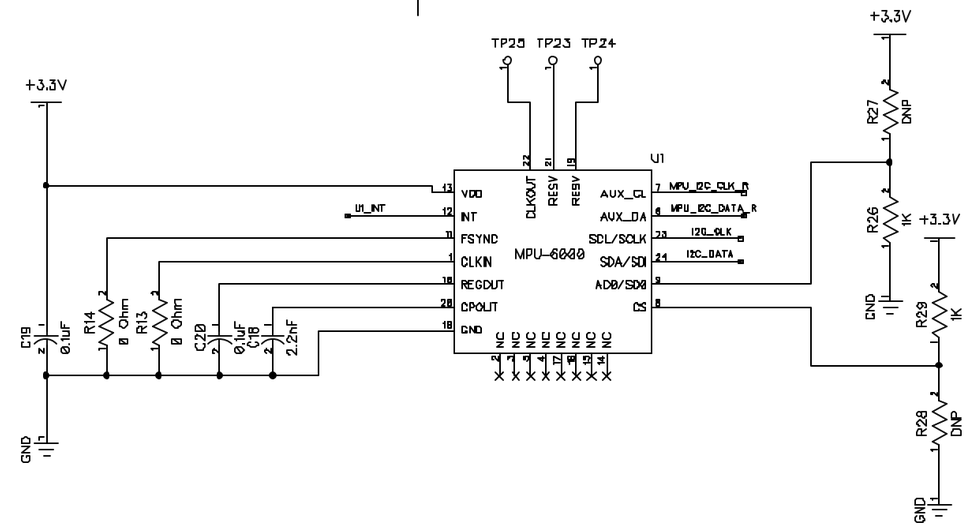

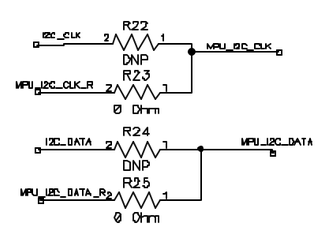

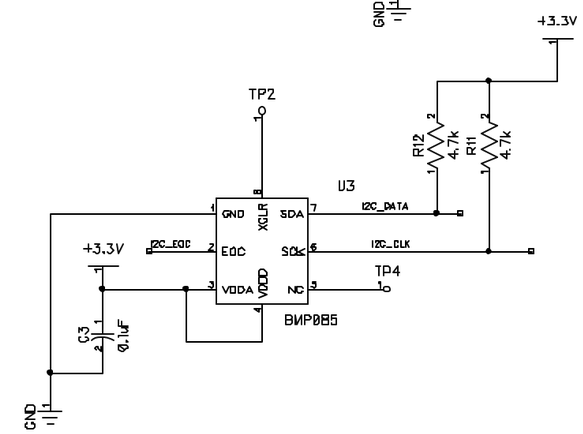

Pop Option on bottom side

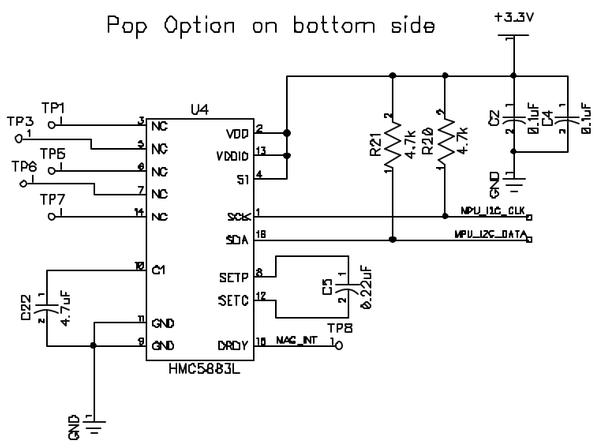

	WIN ENTERPRISES			
	INTEL QUAD COPTER			
	SIZE	FSCM NO.	DWG NO.	REV AF
	SCALE		Sensors	