Rev	Loc	Description	Date	By
A	N/A	Initial Release	2015-08-11	BR

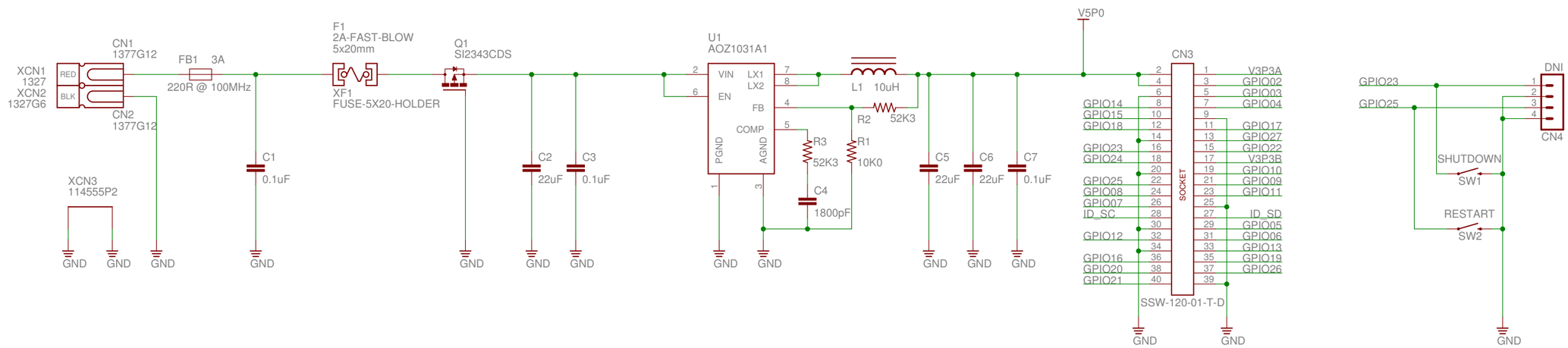

The Positive Charge, LLC
www.thepositivecharge.com

TITLE: Pi-Go

Document Number: Pi-Go.sch
Licensed under the TAPR Open Hardware License (www.tapr.org/OHL)
REV: A

Date: 8/11/15 2:03 PM
Sheet: 1/1