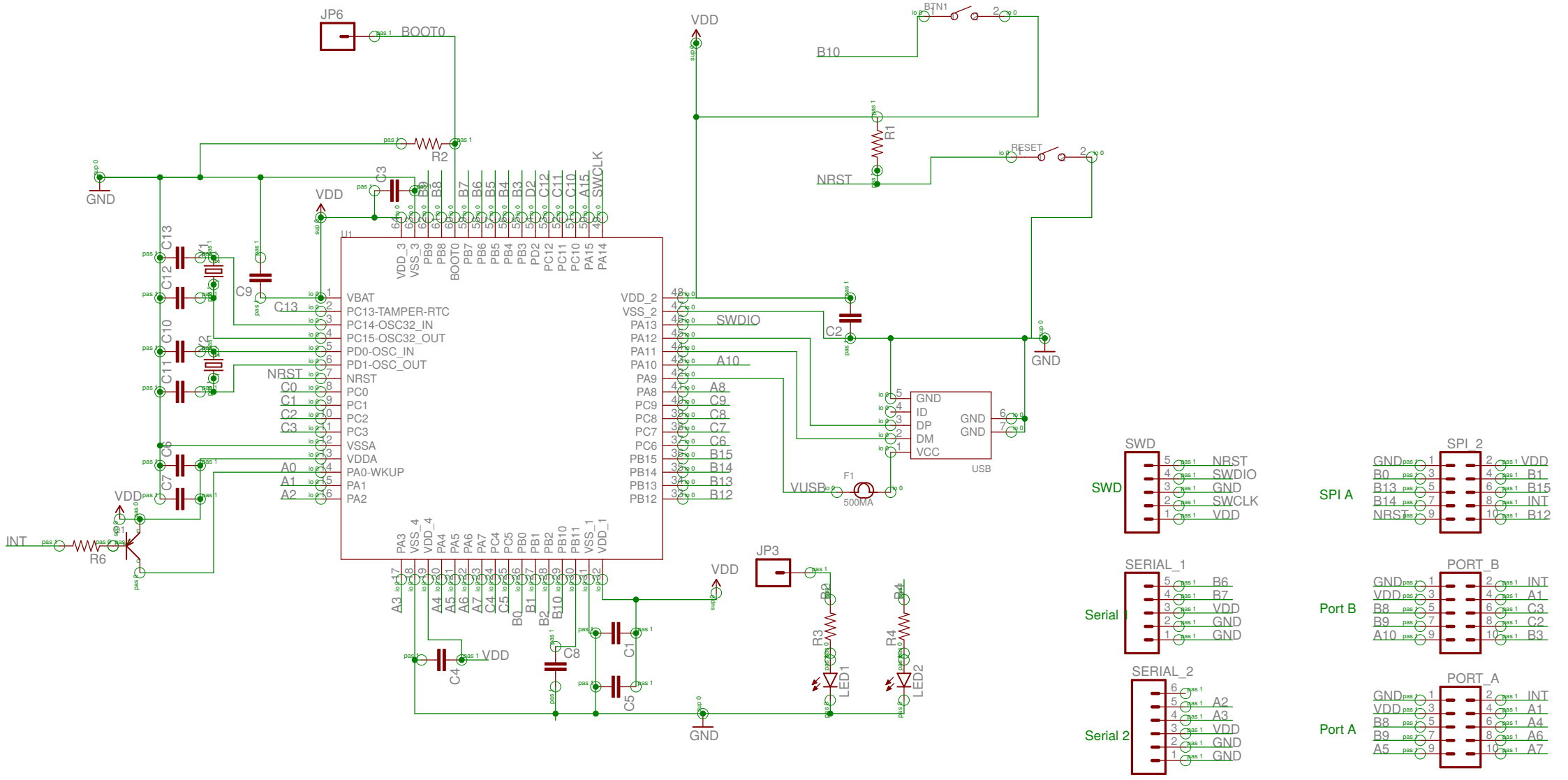
JP6
BOOT0
VDD
B10
BTN1
R1
NRST
RESET
R2
GND
C3
U1
VBAT
PC13-TAMPER-RTC
PC14-OSC32_IN
PC15-OSC32_OUT
PD0-OSC_IN
PD1-OSC_OUT
NRST
PC0
PC1
PC2
PC3
VSSA
VDDA
PA0-WKUP
PA1
PA2
VDD_2
VSS_2
PA13
PA12
PA11
PA10
PA9
PA8
PC9
PC8
PC7
PC6
PB15
PB14
PB13
PB12
SWDIO
A10
A8
C9
C8
C7
C6
B15
B14
B13
B12
VUSB
F1
500MA
C2
USB
GND
ID
DP
DM
VCC
C13
C12
C10
C11
C9
C6
C7
C0
C1
C2
C3
A0
A1
A2
INT
R6
JP3
R3
R4
LED1
LED2
C1
C4
C5
C8
SWD
NRST
SWDIO
GND
SWCLK
VDD
SPI_2
SPI A
VDD
B1
B15
INT
B12
SERIAL_1
Serial 1
B6
B7
VDD
GND
GND
PORT_B
Port B
INT
A1
C3
C2
B3
SERIAL_2
Serial 2
A2
A3
VDD
GND
GND
PORT_A
Port A
INT
A1
A4
A6
A7

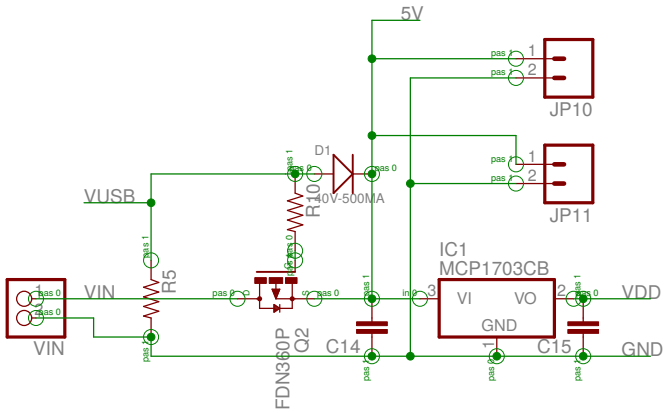
VIN
VIN
R5
FDN360P
Q2
VUSB
R10
D1
40V-500MA
C14
5V
IC1
MCP1703CB
VI
VO
GND
C15
VDD
GND
JP10
JP11