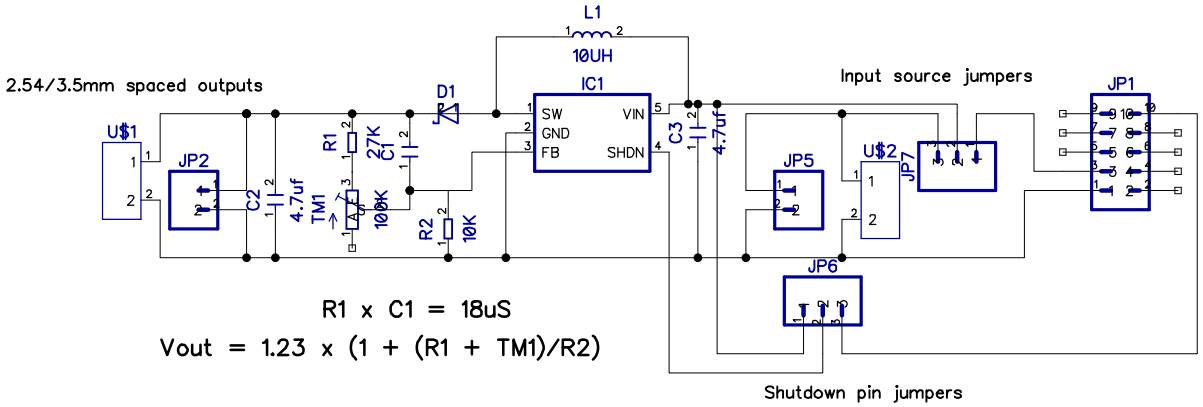

R1 x C1 = 18uS

Vout = 1.23 x (1 + (R1 + TM1)/R2)