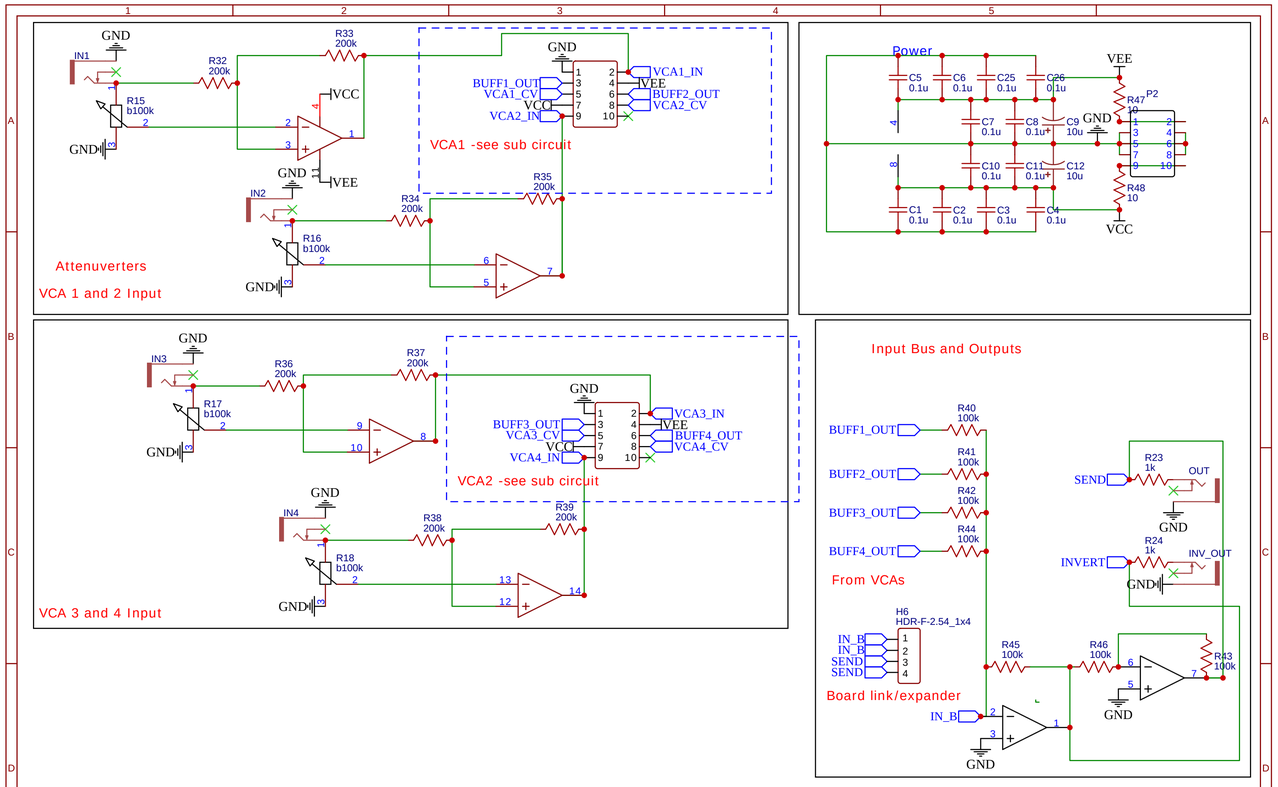
Attenuverters
VCA 1 and 2 Input
VCA1 -see sub circuit
Power
VCA2 -see sub circuit
VCA 3 and 4 Input
Input Bus and Outputs
From VCAs
Board link/expander
H6
HDR-F-2.54_1x4
Attenuverting Mixer w/ mutes
REV: 1.0
Company: The2dCour.com
Sheet: 1/1
Date: 2023-02-27
Drawn By: the2dcour

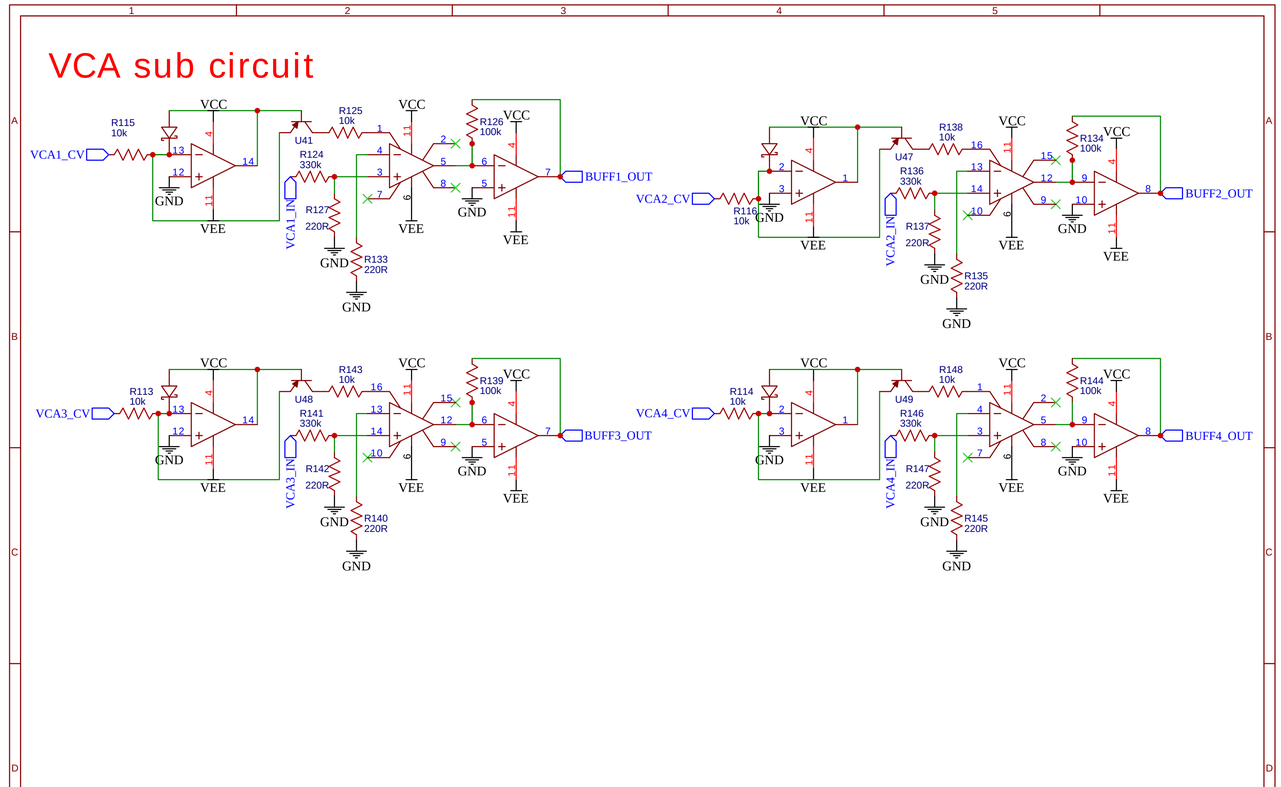
VCA sub circuit
VCA
REV: 1.0
Company: The2dCour.com
Sheet: 1/1
Date: 2023-03-23
Drawn By: the2dcour

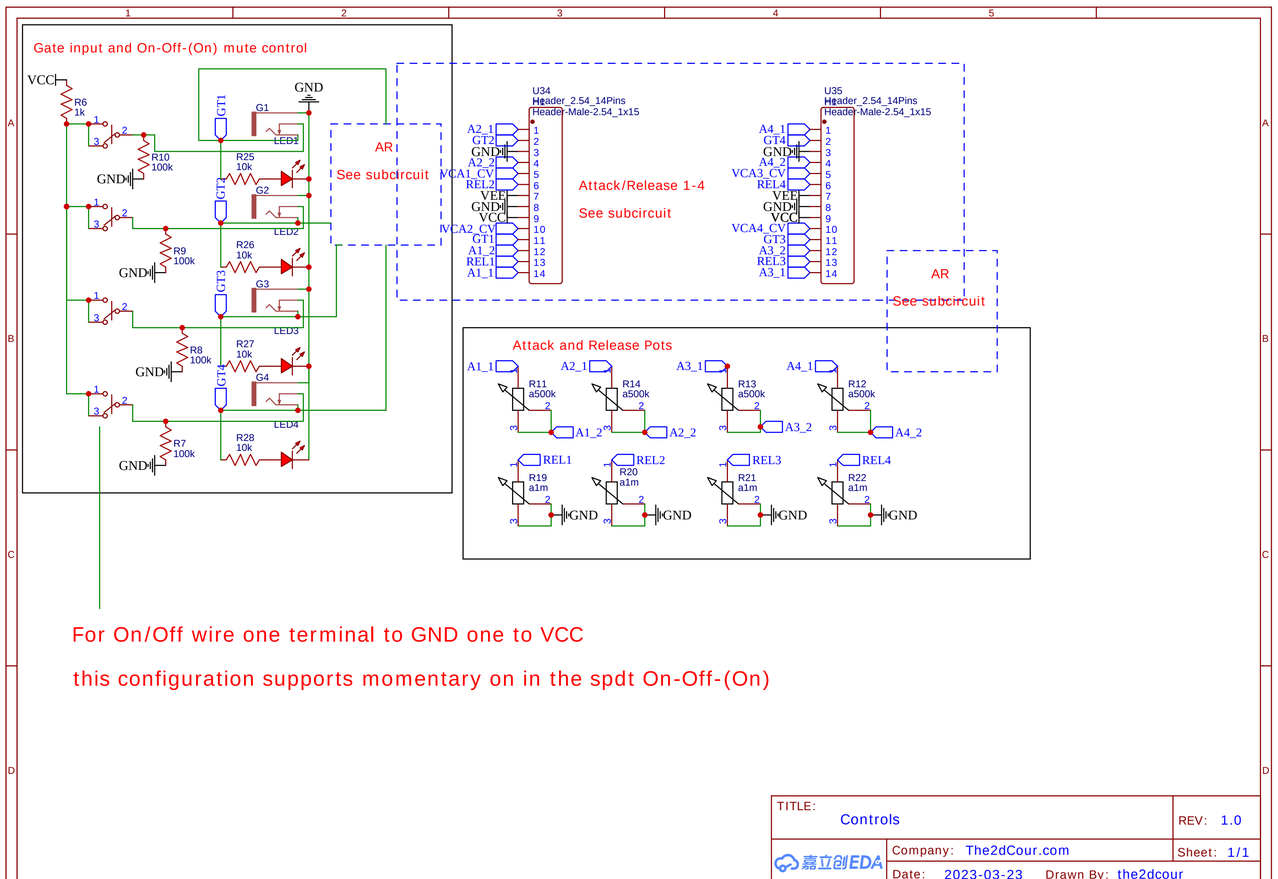
Gate input and On-Off-(On) mute control
AR
See subcircuit
Attack/Release 1-4
See subcircuit
Attack and Release Pots
For On/Off wire one terminal to GND one to VCC
this configuration supports momentary on in the spdt On-Off-(On)
Controls
REV: 1.0
Company: The2dCour.com
Sheet: 1/1
Date: 2023-03-23
Drawn By: the2dcour

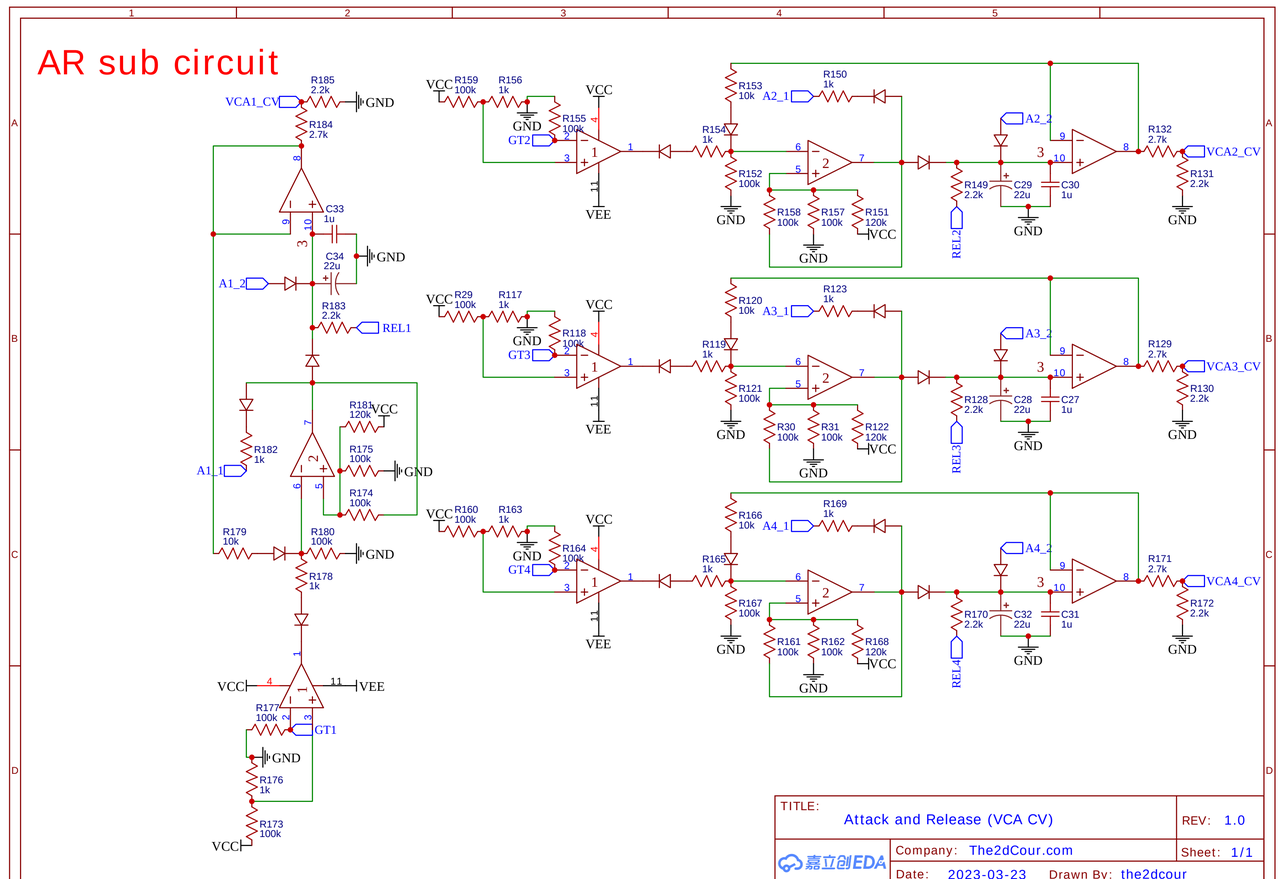
AR sub circuit
Attack and Release (VCA CV)
REV: 1.0
Company: The2dCour.com
Sheet: 1/1
Date: 2023-03-23
Drawn By: the2dcour