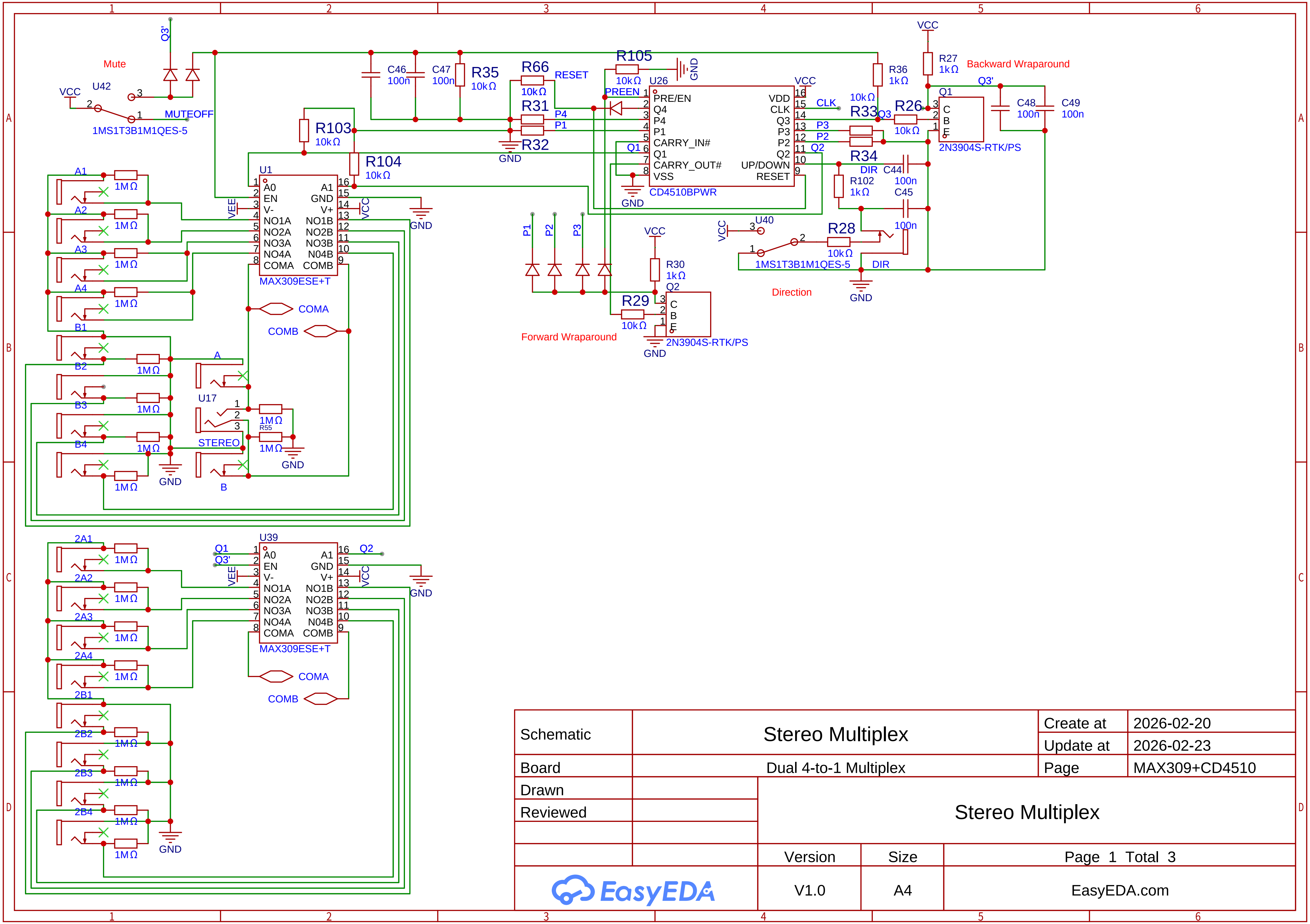
Mute
Q3'
VCC
U42
MUTEOFF
1MS1T3B1M1QES-5
C46
100n
C47
100n
R35
10kΩ
R66
10kΩ
RESET
R105
10kΩ
GND
U26
VCC
PREEN
PRE/EN
Q4
P4
P1
CARRY_IN#
Q1
CARRY_OUT#
VSS
VDD
CLK
Q3
P3
P2
Q2
UP/DOWN
RESET
CD4510BPWR
R31
10kΩ
R32
R103
10kΩ
R104
10kΩ
R36
1kΩ
R27
1kΩ
Backward Wraparound
R33
10kΩ
R26
10kΩ
R34
Q1
2N3904S-RTK/PS
C48
100n
C49
100n
DIR
C44
100n
C45
R102
1kΩ
U40
R28
10kΩ
1MS1T3B1M1QES-5
Direction
P1
P2
P3
Forward Wraparound
R30
1kΩ
Q2
R29
10kΩ
2N3904S-RTK/PS
U1
A0
EN
V-
NO1A
NO2A
NO3A
NO4A
COMA
A1
GND
V+
NO1B
NO2B
NO3B
N04B
COMB
VEE
MAX309ESE+T
A1
A2
A3
A4
B1
B2
B3
B4
1MΩ
COMA
COMB
A
U17
STEREO
R55
B
U39
2A1
2A2
2A3
2A4
2B1
2B2
2B3
2B4
MAX309ESE+T
1
2
3
4
5
6
A
B
C
D

Schematic	Stereo Multiplex	Create at	2026-02-20
		Update at	2026-02-23
Board	Dual 4-to-1 Multiplex	Page	MAX309+CD4510
Drawn			
Reviewed		Stereo Multiplex	
	Version	Size	Page 1 Total 3
EasyEDA	V1.0	A4	EasyEDA.com

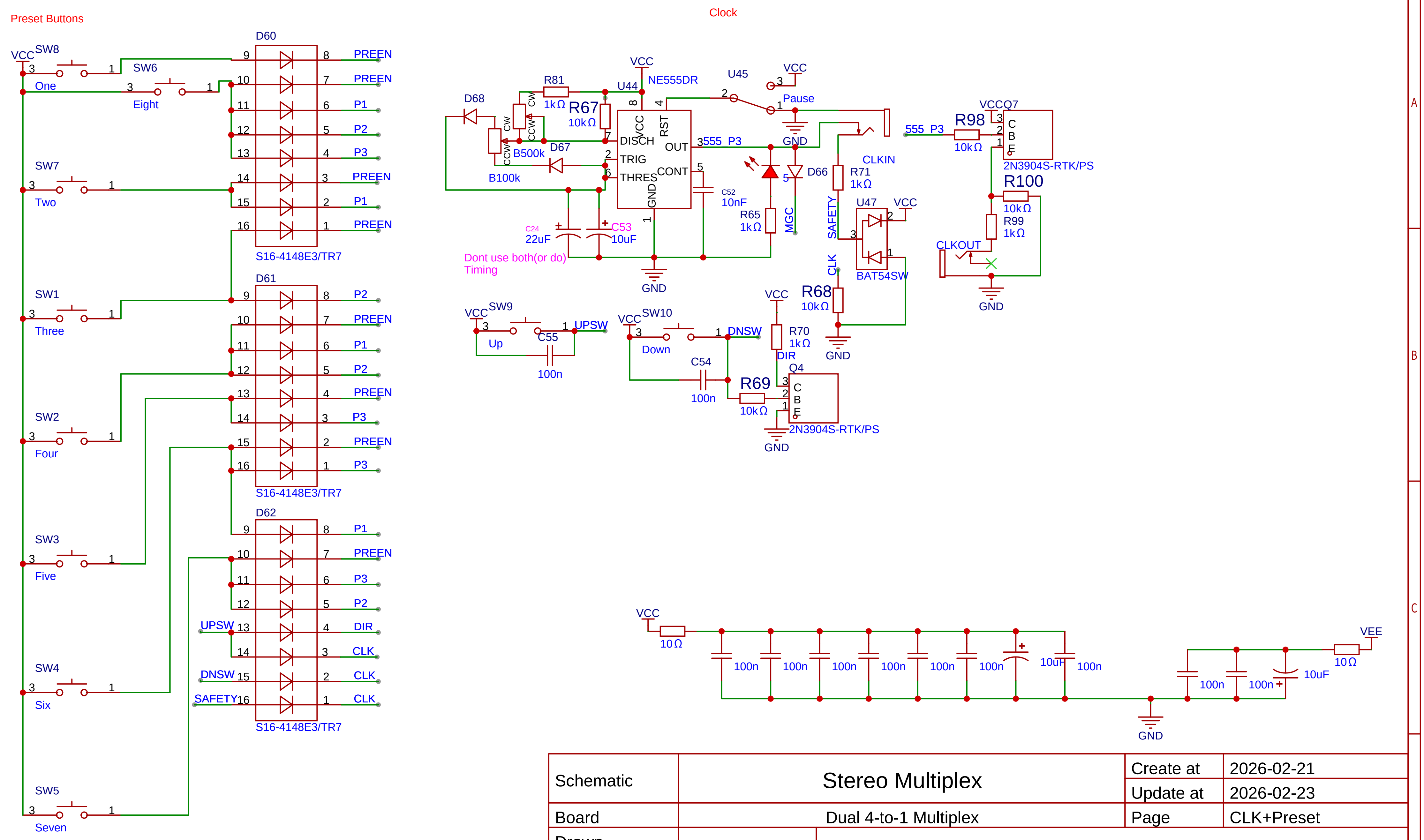
Preset Buttons
Clock
VCC
SW8
SW6
One
Eight
SW7
Two
SW1
Three
SW2
Four
SW3
Five
SW4
Six
SW5
Seven
D60
D61
D62
S16-4148E3/TR7
PREEN
P1
P2
P3
DIR
CLK
UPSW
DNSW
SAFETY
D68
R81
1kΩ
R67
10kΩ
B500k
B100k
D67
CW
CCW
U44
NE555DR
VCC
RST
DISCH
TRIG
THRES
OUT
CONT
GND
555_P3
C24
22uF
C53
10uF
C52
10nF
Dont use both(or do)
Timing
GND
U45
Pause
D66
R65
1kΩ
MGC
R71
1kΩ
CLKIN
SAFETY
U47
BAT54SW
CLK
R68
10kΩ
VCCQ7
R98
10kΩ
2N3904S-RTK/PS
R100
10kΩ
R99
1kΩ
CLKOUT
SW9
Up
C55
100n
SW10
Down
C54
100n
R70
1kΩ
Q4
R69
10kΩ
C
B
E
10Ω
100n
10uF
VEE

Schematic	Stereo Multiplex	Create at	2026-02-21
		Update at	2026-02-23
Board	Dual 4-to-1 Multiplex	Page	CLK+Preset
Drawn		Stereo Multiplex	
Reviewed			
	Version	Size	Page 2 Total 3
EasyEDA	V1.0	A4	EasyEDA.com

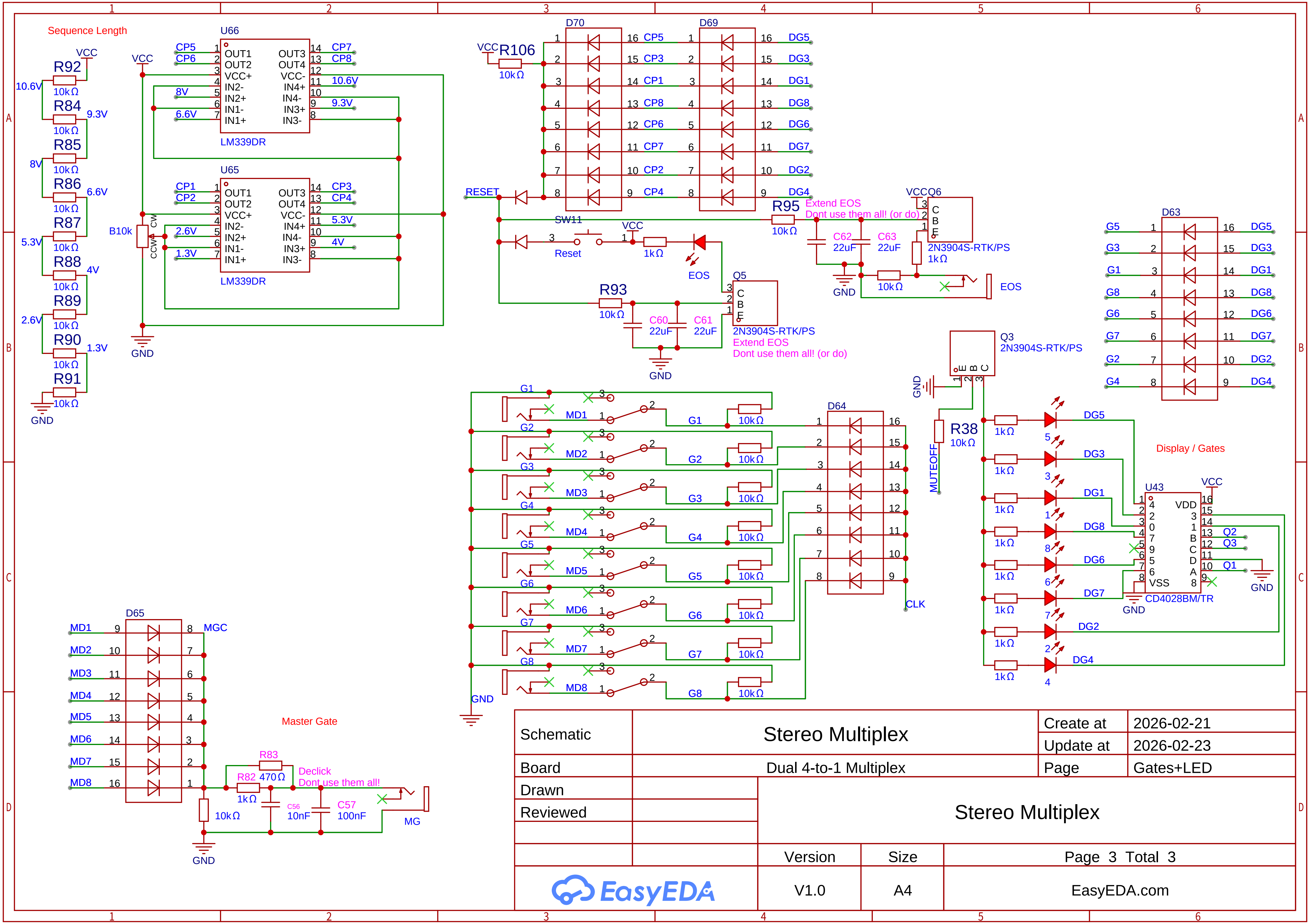
Sequence Length
VCC
R92 10kΩ
10.6V
R84 10kΩ
9.3V
R85 10kΩ
8V
R86 10kΩ
6.6V
R87 10kΩ
5.3V
R88 10kΩ
4V
R89 10kΩ
2.6V
R90 10kΩ
1.3V
R91 10kΩ
GND
B10k
CW
CCW
U66
LM339DR
OUT1 OUT2 VCC+ IN2- IN2+ IN1- IN1+
OUT3 OUT4 VCC- IN4+ IN4- IN3+ IN3-
CP5 CP6 CP7 CP8
U65
LM339DR
CP1 CP2 CP3 CP4
VCC
R106 10kΩ
D70
D69
CP5 CP3 CP1 CP8 CP6 CP7 CP2 CP4
DG5 DG3 DG1 DG8 DG6 DG7 DG2 DG4
RESET
SW11
Reset
1kΩ
EOS
R95 10kΩ
Extend EOS
Dont use them all! (or do)
VCC Q6
C B E
2N3904S-RTK/PS
1kΩ
C62 22uF
C63 22uF
10kΩ
EOS
Q5
2N3904S-RTK/PS
R93 10kΩ
C60 22uF
C61 22uF
Extend EOS
Dont use them all! (or do)
Q3
2N3904S-RTK/PS
E B C
R38 10kΩ
MUTEOFF
D63
G5 G3 G1 G8 G6 G7 G2 G4
DG5 DG3 DG1 DG8 DG6 DG7 DG2 DG4
G1 G2 G3 G4 G5 G6 G7 G8
MD1 MD2 MD3 MD4 MD5 MD6 MD7 MD8
10kΩ
D64
CLK
Display / Gates
1kΩ
5 3 1 8 6 7 2 4
U43
CD4028BM/TR
VDD VSS
Q2 Q3 Q1
D65
MGC
MD1 MD2 MD3 MD4 MD5 MD6 MD7 MD8
Master Gate
R83 470Ω
R82 1kΩ
Declick
Dont use them all!
C56 10nF
C57 100nF
10kΩ
MG
GND

Schematic	Stereo Multiplex	Create at	2026-02-21
		Update at	2026-02-23
Board	Dual 4-to-1 Multiplex	Page	Gates+LED
Drawn	Stereo Multiplex		
Reviewed			
	Version	Size	Page 3 Total 3
EasyEDA	V1.0	A4	EasyEDA.com