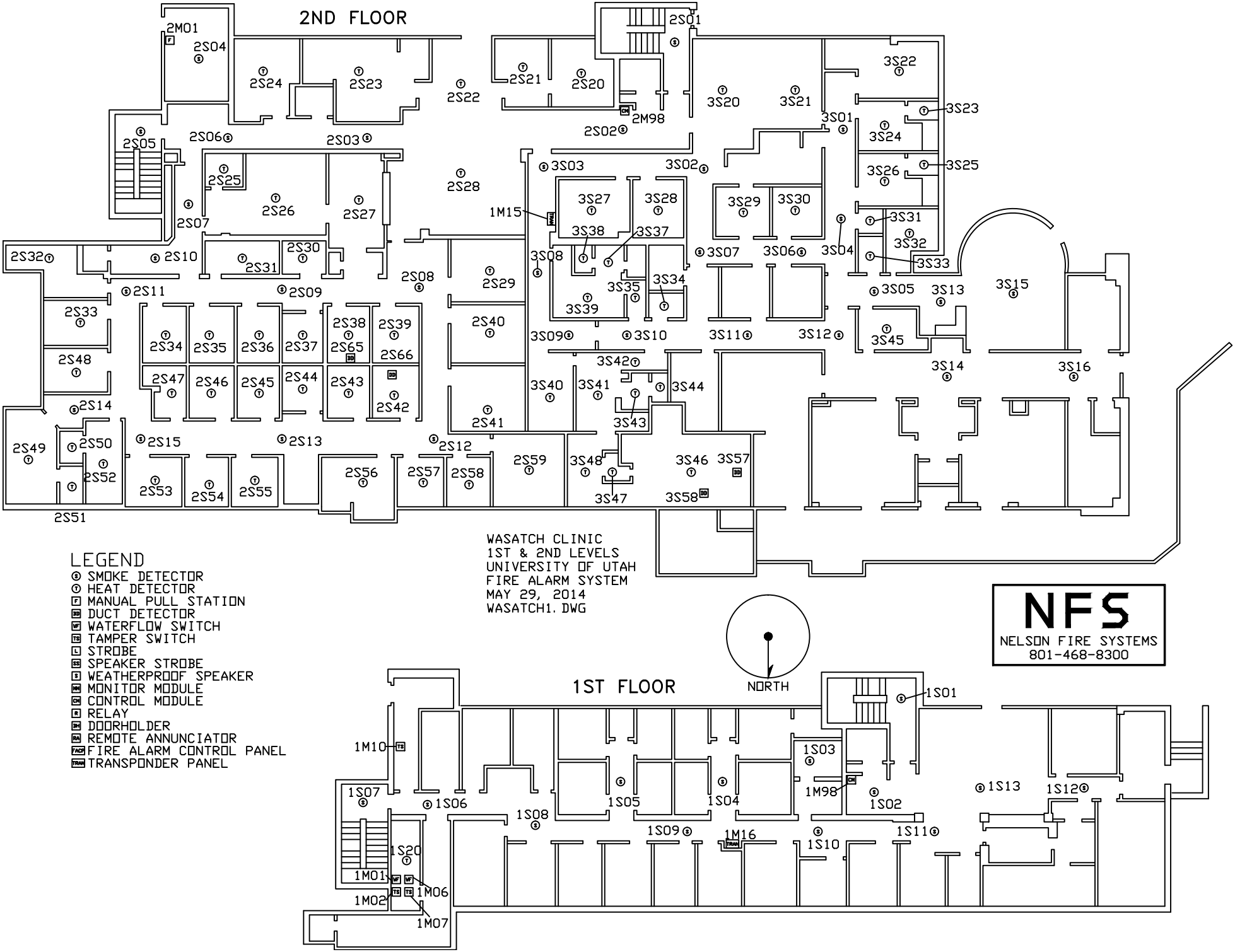
2ND FLOOR
1ST FLOOR
NORTH
LEGEND
SMOKE DETECTOR
HEAT DETECTOR
MANUAL PULL STATION
DUCT DETECTOR
WATERFLOW SWITCH
TAMPER SWITCH
STROBE
SPEAKER STROBE
WEATHERPROOF SPEAKER
MONITOR MODULE
CONTROL MODULE
RELAY
DOORHOLDER
REMOTE ANNUNCIATOR
FIRE ALARM CONTROL PANEL
TRANSPONDER PANEL
WASATCH CLINIC
1ST & 2ND LEVELS
UNIVERSITY OF UTAH
FIRE ALARM SYSTEM
MAY 29, 2014
WASATCH1.DWG
NFS
NELSON FIRE SYSTEMS
801-468-8300

LEGEND

- SMOKE DETECTOR
- HEAT DETECTOR
- MANUAL PULL STATION
- DUCT DETECTOR
- WATERFLOW SWITCH
- TAMPER SWITCH
- SPEAKER/STROBE
- WEATHERPROOF SPEAKER
- MONITOR MODULE
- CONTROL MODULE
- RELAY
- DOORHOLDER
- FIRE ALARM CONTROL PANEL
- TRANSPONDER PANEL

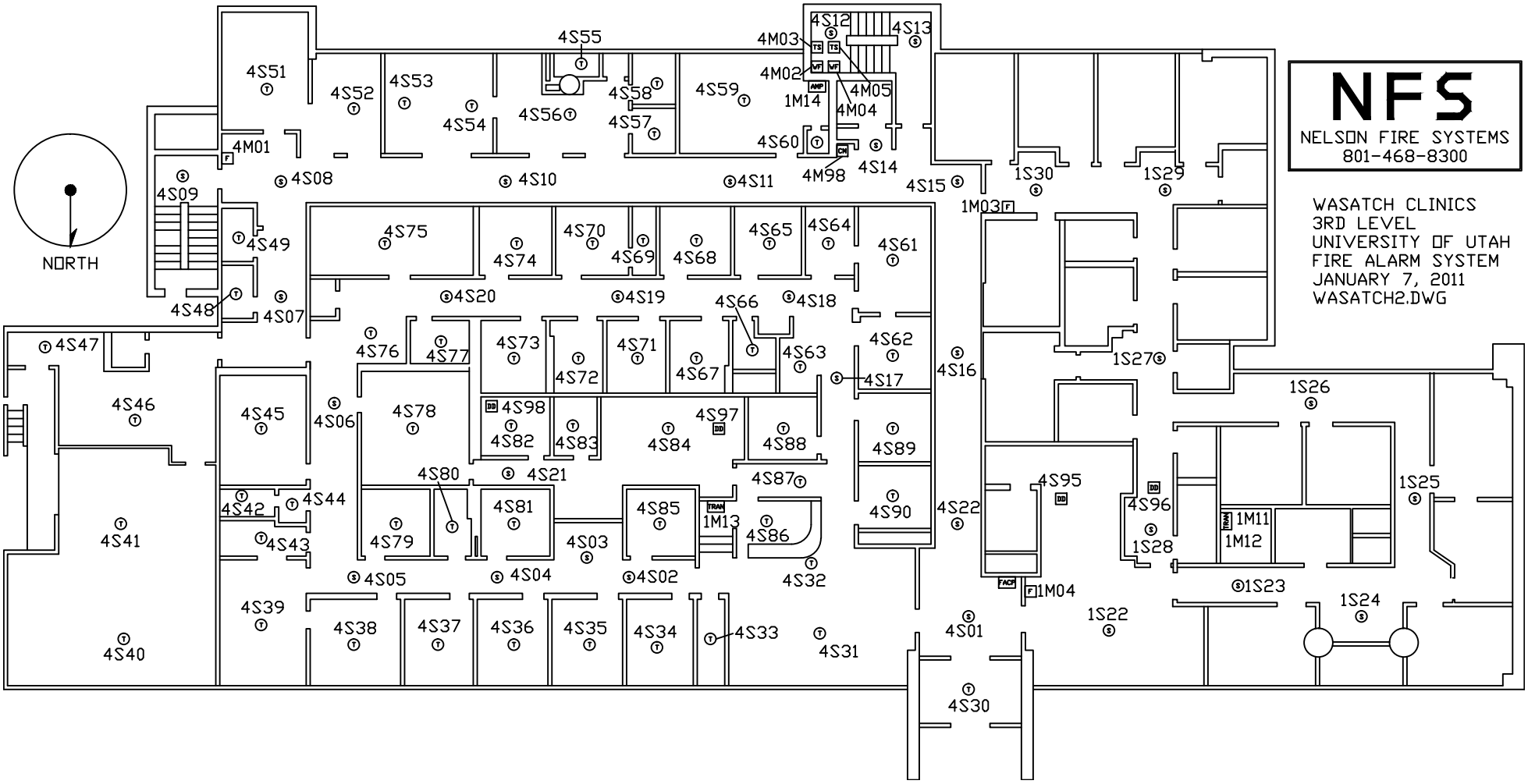

NFS
NELSON FIRE SYSTEMS
801-468-8300

WASATCH CLINICS
3RD LEVEL
UNIVERSITY OF UTAH
FIRE ALARM SYSTEM
JANUARY 7, 2011
WASATCH2.DWG