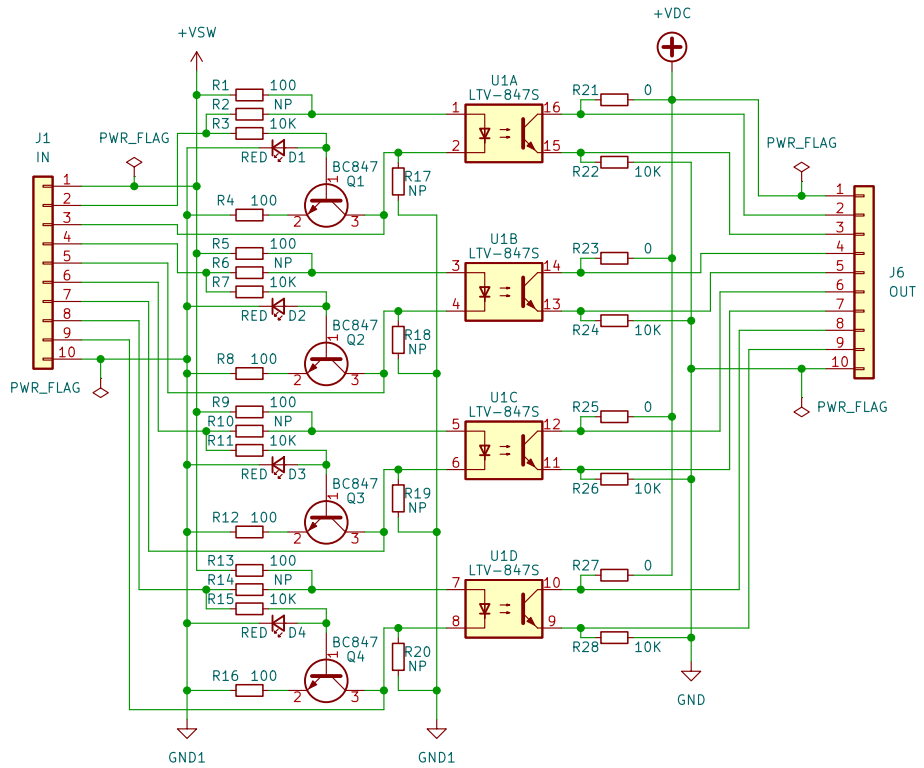

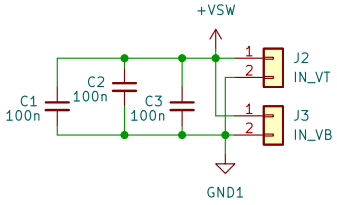

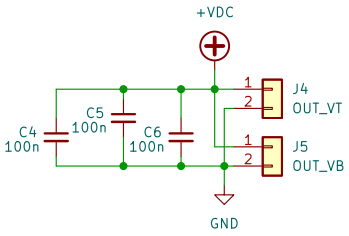

H1 MountingHole
H2 MountingHole
H3 MountingHole

Daniel Glaser
the78mole

Sheet: /
File: 4CH-Opto-ISO.kicad_sch

Title: 4CH-Opto-Iso

Size: A4	Date: 2023-09-26	**Rev: 0.0.1**
KiCad E.D.A. kicad (6.0.4)		Id: 1/1