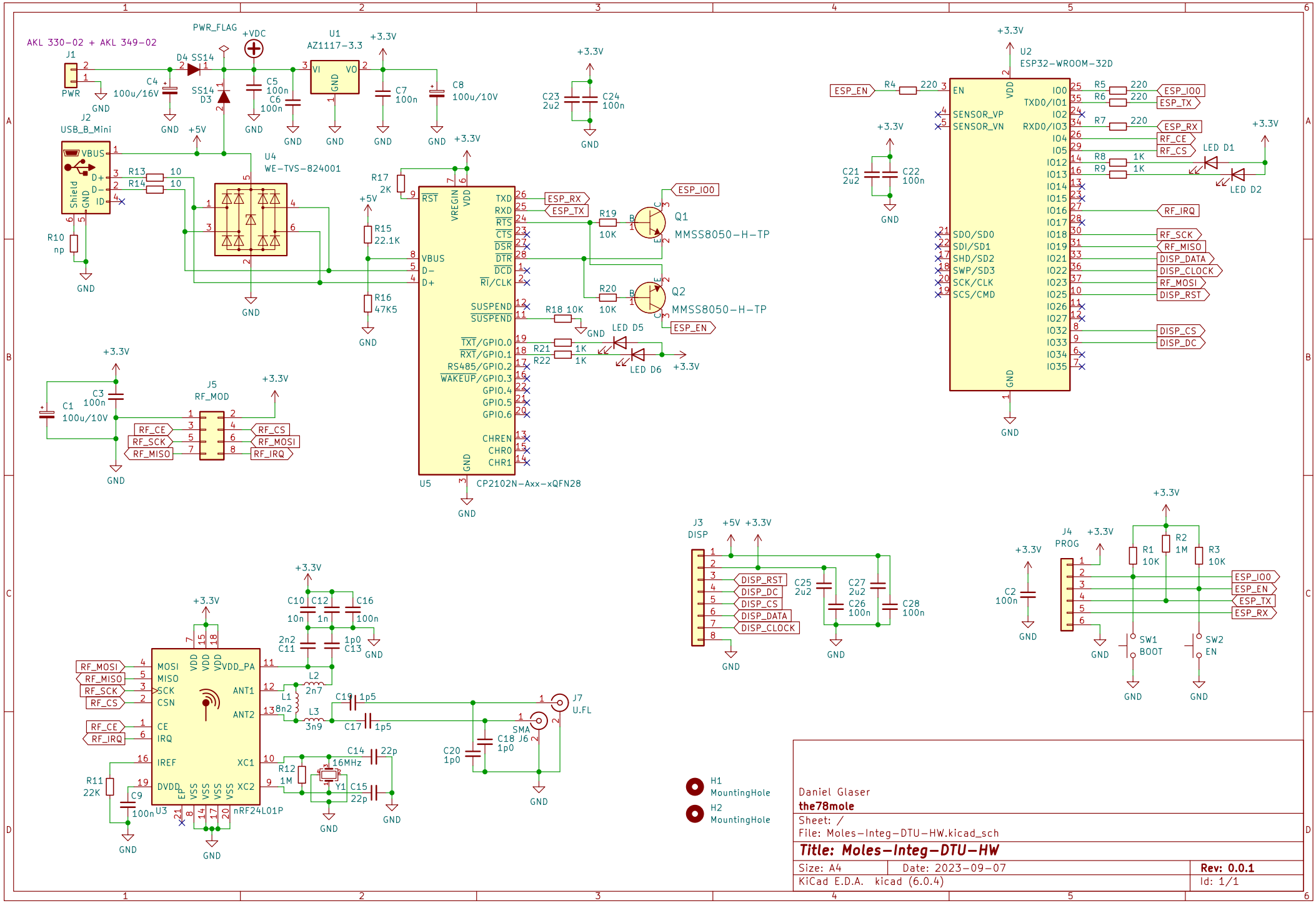

Daniel Glaser
the78mole
Sheet: /
File: Moles-Integ-DTU-HW.kicad_sch

Title: Moles-Integ-DTU-HW

Size: A4	Date: 2023-09-07	**Rev: 0.0.1**
KiCad E.D.A. kicad (6.0.4)		Id: 1/1