A Fully Distributed Electrical Power System for Small Satellites

Jian Chen
School of Astronautics
Harbin Institute of Technology
Harbin, China
chinjian@163.com

Tianyu Feng
School of Astronautics
Harbin Institute of Technology
Harbin, China
rainyuoko@gmail.com

Xueqin Chen
School of Astronautics
Harbin Institute of Technology
Harbin, China
cxqhit@163.com

Huayi Li
School of Astronautics
Harbin Institute of Technology
Harbin, China
lihuayi@hit.edu.cn

2023 IEEE Fifth International Conference on DC Microgrids (ICDCM) | 979-8-3503-2127-2/23/$31.00 ©2023 IEEE | DOI: 10.1109/ICDCM54452.2023.10433621

***Abstract*—This paper proposes a novel fully distributed electrical power system (FD-EPS) for small satellites. Current EPSs are first summarized, and satellite energy balance and requirements for EPS are analyzed. The design of a FD-EPS, which divides each function in the current EPS into parallelizable modules, is then proposed. Each module can operate independently or be controlled by an on-board computer. The modules are connected through a power bus and a communication bus to simplify the connection. The capability of the EPS can be expanded by adding more modules or improving the modules' capability. Prototypes for each module type were developed, and preliminary tests were conducted.**

***Index Terms*—Small satellites, Electrical power system, Distributed systems, Minimum functional module, System design and test**

I. Introduction

Small satellites, especially micro and nanosatellites, are drawing attention for lightweight, low cost, short design and development period. Thousands of nanosatellites and CubeSats have been launched since 1999. Despite the rapid growth of the satellites' capabilities, the power density and capability of the electrical power system (EPS) have improved little.

The EPS consists of four main parts: solar panels, batteries, power conditioning and distribution unit (PCDU), and misc circuitry, including cable assembly, temperature sensors, and heaters [1]. The solar panels convert the solar energy to electricity. The batteries store the electricity and supply it to the systems during eclipse. The PCDU converts electricity from the solar panels and the batteries, controls the power switch of each system, and monitors the parameters. The cable assembly connects the PCDU to the solar panels, batteries, and all other systems and instruments. The temperature sensors monitor the temperatures of the instruments, and the heaters provide appropriate operating temperatures for them.

Centralized EPS architecture is widely used in all types of satellites, including cubesats [2]. This architecture usually places all power stages and the PCDU controller in one enclosure, including the solar regulator, battery charger, and DC-DC converter. This architecture has a clear border for the system and is straightforward for heat dissipation, electromagnetic shielding, and radiation protection design. However, there are obvious shortcomings. The EPS can hardly be standardized as different requirements for different satellites, adding much workload to the satellite design and development process. Furthermore, routing the cable assemblies inside the satellite can also be problematic, as all electronic systems and devices need to connect to the PCDU.

979-8-3503-2127-2/23/$31.00 ©2023 IEEE

To improve the flexibility of the EPS, modular EPS has been proposed [3]–[7]. Gonzalez-Llorente Jesus et al. [4] use printed circuit boards (PCBs) as solar panel substrates and mount the solar cell regulators on the back side, reducing the size of PCDU. Ali Anwar et al. [5] separate the PCDU into two different boards and use modular design for each circuit part. The proposed architectures and designs mainly focus on logically separating functions, and different circuit parts are still on the same board.

Considering the satellites' energy generation, storage, and consumption, new concepts such as space microgrids have been proposed [8], [9]. Based on the space microgrids and combining power and communication buses on the satellite, a novel EPS architecture, the FD-EPS, is proposed. The satellite energy balance and requirements for the EPS are first analyzed. The fully distributed architecture is then illustrated. The prototypes of each part and the whole system are designed and tested, showing promising results for small satellite applications.

II. Satellite EPS analysis

A. Satellite energy balance

The sun is the ultimate energy source for most low-earth orbit (LEO) satellites. The solar panels convert solar energy into electricity. The total energy generated in one orbit cycle, E_{gen}, can be defined as follows [10]:

$$E_{gen} = \int_{t_0}^{t_a} A_{SA} \sin\theta_t E_{SA} \eta_{cell,t} P_{sun} dt \tag{1}$$

where A_{SA} is the total solar panel area, $\sin\theta_t$ is the angle between the solar panel plane and the incident solar light, E_{SA} is the ratio between the total solar cell area and the solar panel area, $\eta_{cell,t}$ is the solar cell efficiency at temperature t degree Celsius, P_{sun} is the solar constant, and the sunlight period is from t_0 to t_a during one orbit cycle.

Authorized licensed use limited to: Universidad Tecnica Federico Santa Maria. Downloaded on March 11,2024 at 21:37:38 UTC from IEEE Xplore. Restrictions apply.

The total energy consumption can be described as:

$$E_{consume} = \sum_{i} \sum_{j} \left(\int_{t_{ja}}^{t_{jb}} P_{j,k,t} dt \right) \tag{2}$$

where $P_{j,k,t}$ is the instant power of the jth instrument under operating mode k. The operating mode starts at t_{ja} and ends at t_{jb}. i is the total number of the instruments in the satellite.

The batteries supply the difference between the generated energy and the consumed energy. When the generated energy exceeds the consumed energy, the surplus energy is stored in the batteries. When the generated energy is less than the consumed energy, the batteries supply the deficit, meaning the batteries must have sufficient capacity to provide the energy required during the eclipse period and throughout the satellite's lifetime. The energy balance can be expressed as follows:

$$\begin{cases} E_{batt,chg} = (E_{gen} - E_{consume,sunlight}) \eta_{batt,chg} \\ E_{consume,eclipse} = E_{batt,dischg} \eta_{batt,dischg} \\ E_{batt,dischg} = C_{batt} V_{batt} \\ N_{cycle} = N_{rated} / (C_{batt} / C_{batt,full}) \end{cases} \tag{3}$$

where $E_{consume,sunlight}$ and $E_{consume,eclipse}$ are the energy consumed in sunlight and eclipse, respectively. $E_{batt,chg}$ and $E_{batt,dischg}$ represent the energy stored in and provided by the batteries, respectively. $\eta_{batt,chg}$ and $\eta_{batt,dischg}$ represent the battery charging and discharging efficiency, respectively. C_{batt} is the capacity used during one orbit cycle, and V_{batt} is the satellite power bus voltage. N_{rated} is the rated battery cycle life, $C_{batt,full}$ is the rated battery assembly capacity, and N_{cycle} is the calculated charge/discharge cycles during the satellite's whole lifetime. The N_{cycle} should be greater than the actual orbit cycle number to support the satellite's whole lifetime energy supply.

In the long term, the generated energy should be equal to the consumed energy to maximize the satellite's capability, and the used battery capacity should be kept at a relatively low level. Under the above conditions, the solar panel area, the total battery capacity, and the power requirement for the EPS can be calculated.

B. EPS design requirement

As analyzed above, the EPS is required to provide the necessary power and energy for the satellite. Besides, the rapid growth of small satellites, especially commercial satellites, brings new requirements for the EPS, which can be categorized into the following aspects:

1) Rapid design and development.
2) Flexible in design to meet different power and energy requirements.
3) Easy assembly, integration, and test process.
4) Thorough and comprehensive monitoring and sensing capability.

The EPS design procedure is described in [8], [11] and other papers. The generalized procedure can be described as:

1) Calculate the power consumption and operation time for each operating mode.
2) Calculate the energy consumption in defined periods to meet the energy balance requirements.
3) Determine the battery capacity, the solar panel area, and other parameters according to the power and energy balance requirements;
4) Detailed design and development of the EPS.

The detailed design and development procedure takes the longest time since hardware design, PCB layout, cable assembly design and coordination with other systems are required. Besides, the lack of comprehensive sensing and monitoring capability due to the circuitry and cabling complexity makes it challenging to monitor the satellite's status thoroughly.

III. Fully distributed EPS architecture

To expand the capability and flexibility of the EPS, a new architecture, the FD-EPS, is proposed. The comparison of the centralized [12] and the FD-EPS is shown in Fig. 1.

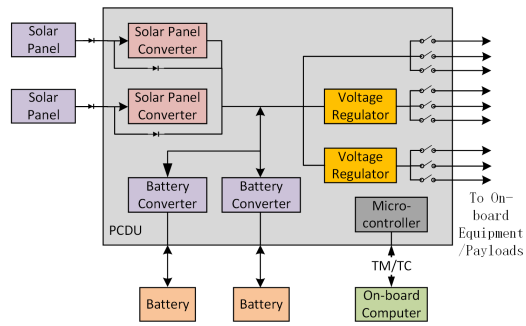

(a) Current centralized architecture.

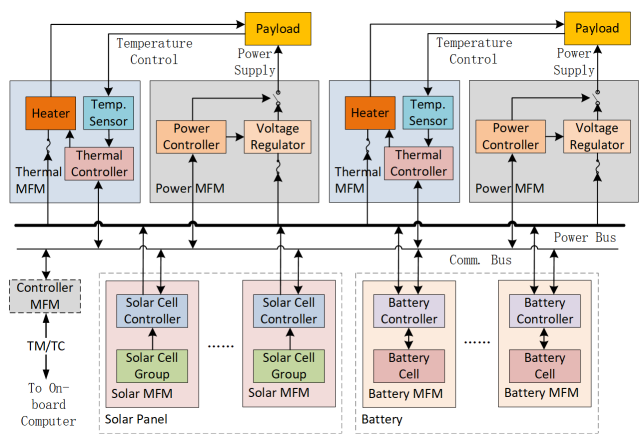

(b) Fully distributed architecture.

Fig. 1: The centralized and fully distributed EPS architecture.

The proposed architecture splits each part of the PCDU into standalone modules called the minimum functional modules (MFMs). Each MFM is a fully functional module that contains a microcontroller and peripheral circuits and performs only one function. There are several types of MFMs, including the solar MFM, the battery MFM, the power MFM, the thermal MFM, and the controller MFM. The MFMs can be placed near the connecting systems or instruments. Different MFMs are connected by a communication bus and a power bus, and can

Authorized licensed use limited to: Universidad Tecnica Federico Santa Maria. Downloaded on March 11,2024 at 21:37:38 UTC from IEEE Xplore. Restrictions apply.

operate independently or be controlled by the controller MFM. In this configuration, the capability of the EPS can be easily upgraded without redesigning the entire EPS. The proposed architecture can also reduce the heat dissipation stress, enhance the monitoring and sensing capability, and significantly reduce cabling complexity inside the satellite.

A. The solar MFM

The solar MFM comprises several solar cells, a solar cell regulator, and a microcontroller. Since the output voltage and current may vary between solar cells and fluctuate according to solar irradiation, a limited number of solar cells are connected in series to provide the required voltage while reducing the complexity of the maximum power point tracking (MPPT) control algorithm. The microcontroller monitors the operating status and controls the solar cell regulator to operate as required. The solar MFM is shown in Fig. 2.

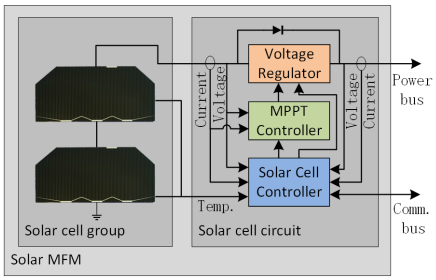

(a) The solar MFM diagram.

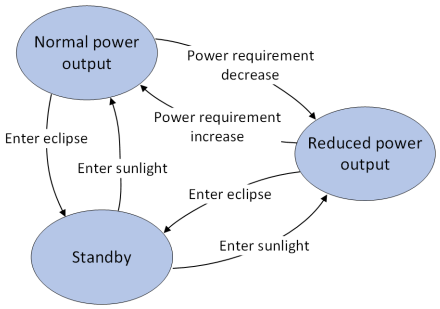

(b) The solar MFM's operating mode.

Fig. 2: The solar MFM diagram and operating mode.

There are multiple solar MFMs in a satellite to provide the required power and energy. If the maximum power generated from the solar cells exceeds the power required by the satellite systems, the circuit reduces input power. The operating mode of the solar MFM is shown in Fig. 2b.

B. The battery MFM

The battery MFM contains batteries, a battery protection circuit, a battery charger, a battery converter, and a micro-controller. Similar to the solar MFM, several battery cells are connected in series to achieve the required voltage and reduce the battery specification difference impact. The battery charger charges the batteries from the power bus, and the battery converter converts the battery voltage to the power bus voltage. The battery protection circuit protects the batteries from extreme conditions such as short-circuits and over-charging, and the microcontroller controls and monitors the operating status. The battery MFM is shown in Fig. 3.

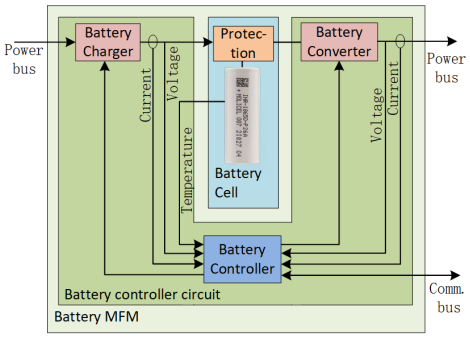

(a) The battery MFM diagram.

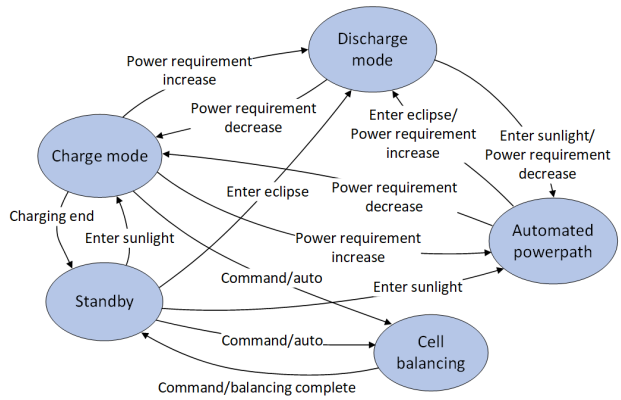

(b) The battery MFM's operating mode.

Fig. 3: The battery MFM diagram and operating mode.

There can be multiple battery MFMs in a satellite. When the satellite is in the eclipse, the battery MFMs are in discharge mode. When the satellite is in the sunlight, and the power capability from the solar MFMs is greater than the required, the battery MFMs are in charge mode. When the power requirement fluctuates, the battery MFMs enter automated powerpath mode, in which the module automatically adjusts the input and output power. The battery MFMs can enter cell balancing mode automatically while charging or by command. The operating mode is shown in Fig. 3b.

C. The power MFM

The power MFM converts the power bus voltage to the voltage required by the load, and controls the power switch according to commands. An electronic fuse is used to protect the power bus and the load from circuit failure, and a micro-controller is used to control the converter and the switch and to monitor the status. The power MFM is shown in Fig. 4.

The operating mode of the power MFM includes standby mode, in which it turns off the power switch to the load; power on mode, in which it turns on the power switch; and protection mode. The operating modes are shown in Fig. 4b.

Authorized licensed use limited to: Universidad Tecnica Federico Santa Maria. Downloaded on March 11,2024 at 21:37:38 UTC from IEEE Xplore. Restrictions apply.

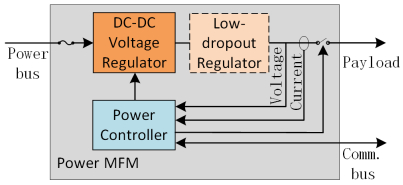

(a) The power MFM diagram.

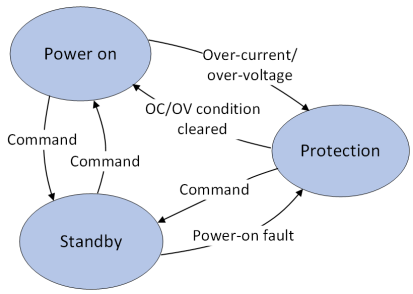

(b) The power MFM's operating mode.

Fig. 4: The power MFM diagram and operating mode.

D. The thermal MFM

The thermal MFM monitors the temperatures of the systems and keeps them within acceptable ranges. The thermal MFM integrates a temperature sensor, a microcontroller, and peripheral circuits. The heater power switch can be integrated inside the thermal MFM or use the power MFM. In the latter case, the thermal MFM contains only a temperature sensor and a microcontroller. The thermal MFM is shown in Fig. 5.

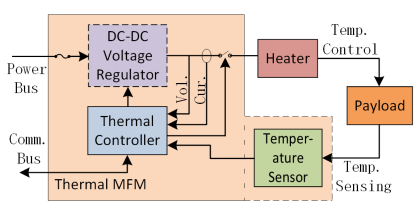

(a) The thermal MFM diagram.

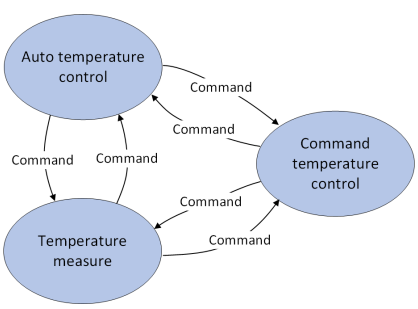

(b) The thermal MFM's operating mode.

Fig. 5: The thermal MFM diagram and operating mode.

The thermal MFM's operating mode is relatively simple. In auto temperature control mode, the microcontroller reads the sensor and controls the heater according to the preset temperature range. In command temperature control mode, the microcontroller controls the heater according to the commands from the satellite computer. In temperature measure mode, the microcontroller reads the sensor only and sends it to the computer. Different modes are switched by commands, as shown in Fig. 5b.

E. The controller MFM

With each module containing a microcontroller, the controller MFM becomes optional since the modules can be controlled by the satellite computer directly. In complex systems, the controller MFM can be used to handle the communication between the computer and dozens of modules to relieve the computer's burden. Furthermore, the controller MFM can analyze the data from the modules to accomplish high-level monitoring and diagnosis capability.

F. Reliability and scalability

Reliability is another concern in satellite power systems. Adding redundancy is the most widely used approach, and with FD-EPS, it becomes easy. Each module is functional-complete, and the same type of modules can be added to provide backup capability. As each module takes only a small part of the total power capability of the EPS, losing one or two modules has little impact on the whole system.

Scalability is also more effortless because each module can be altered without affecting others. The modules can be standardized in different capabilities, and different numbers of modules can be connected to meet different requirements.

IV. Prototype and System Test

Prototypes of the modules are designed to verify the proposed system, and preliminary tests are conducted.

The solar MFM prototype is designed based on a centralized solar panel counterpart, with solar cell circuits added on the back side of the PCB substrate. The solar MFM weighs 85.79 grams, only 13.64 grams heavier than the original solar panel. Additional solar MFMs can be connected to the power bus to provide more power to the satellite. The solar MFM prototype is shown in Fig. 6, and the module test result is shown in Table I. The light source in the test is an incandescent lamp with 180 W/m^2 light irradiation intensity.

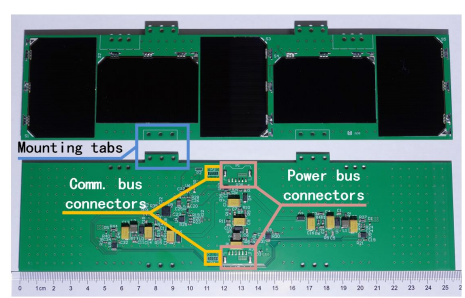

Fig. 6: The solar MFM prototype.

The battery MFM prototype uses a Boston Power Swing 5300 lithium-ion battery cell for its long cycle life, and it is approximately twice the size of a standard 18650 battery so that it can be easily altered. Similar to solar MFMs, multiple

Authorized licensed use limited to: Universidad Tecnica Federico Santa Maria. Downloaded on March 11,2024 at 21:37:38 UTC from IEEE Xplore. Restrictions apply.

TABLE I: Solar cell MFM prototype test results.

Parameter	Test 1	Test 2	Comment
Total input power/(W)	0.2986	0.5258	5 solar cells total power
MPPT output voltage/(V)	5.1012	4.0662	-
MPPT output current/(A)	0.0523	0.1032	-
MPPT conversion efficiency	89.3%	79.8%	-
Module weight	85.79 g		Without connector and cable

battery MFMs can be mounted onto different locations in a satellite and connected to the power bus, maximizing space utilization. The prototype of the battery MFM is shown in Fig. 7, and its test result is shown in Table II.

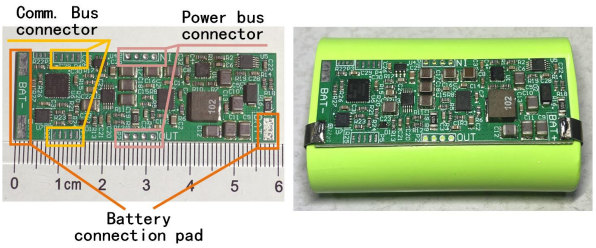

Fig. 7: The battery MFM prototype.

TABLE II: Battery MFM prototype test results.

Parameter	Result	Condition
Charge current	0.568 A	Set to 0.53A
Charger temperature rise	33 °C	0.568 A charging, room temp. 24 °C
Voltage regulator temperature rise	5 °C	1A output, room temp. 22 °C
	10 °C	2A output, room temp. 21 °C
	23 °C	3A output, room temp. 21 °C
	46 °C	4A output, room temp. 20 °C
	84 °C	5A output, room temp. 21 °C
Over-charge protection	OK	-
Over-discharge protection	OK	-
Over-current protection	OK	-
Module weight	6.64 g	Without battery and connector

The power MFM and the thermal MFM prototype are designed as small as possible to mount near the connecting instrument. As shown in Fig. 8a, the size of a single-sided power MFM is similar to the widely used 25-pin micro-D connector, and if designed in double-sided form, it may be mounted inside the connector assembly. The power MFM employs two-stage protection and can monitor the voltage and current of the load to calculate its energy consumption. The single-sided thermal MFM can be mounted onto the surface of an instrument to monitor its temperature. Both MFMs consume little power, minimizing the impact on measurement accuracy. The modules and test results are shown in Fig. 8 and Table III.

The system test employed one solar MFM, one battery MFM, three power MFMs, and three thermal MFMs. All the

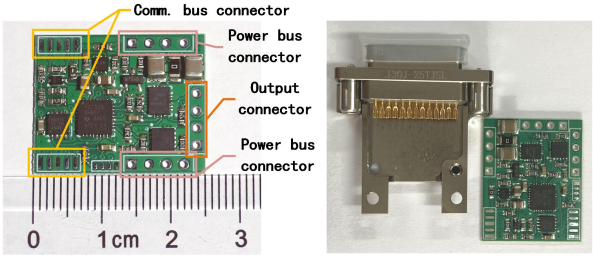

(a) The power MFM prototype.

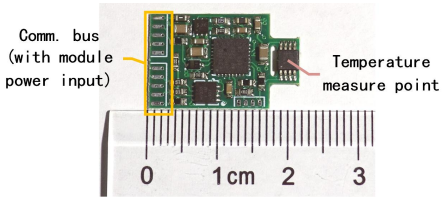

(b) The thermal MFM prototype.

Fig. 8: The power and the thermal MFM prototype.

TABLE III: Power and thermal MFM prototype test results.

Parameter		Result	Condition
Power MFM	Power on/off	OK	-
	Current measurement	0.033 A	Elec. load off
		1.993 A	Elec. load set to 2A
		5.014 A	Elec. load set to 5A
	Power switch temperature rise	8 °C	1A output, room temp. 22 °C
		17 °C	2A output, room temp. 22 °C
		37 °C	3A output, room temp. 21 °C
		64 °C	4A output, room temp. 22 °C
		88 °C	5A output, room temp. 22 °C
	Power consumption	5.4 mW	Standby mode, average power, 1 measurement per second
	Weight	1.70 g	Without connector and cable
Thermal MFM	Temperature measurement	1.12 °C	Thermometer reads -0.1 °C
		23.31 °C	Thermometer reads 21.8 °C
		100.12 °C	Thermometer reads 98.3 °C
	Power consumption	8.9 mW	Average power, 1 measurement per second
	Weight	0.76 g	Without connector and cable

modules were connected to one power bus and one communication bus in series. Fig. 9a shows the module connections, and Fig. 9b shows the commands and the telemetry data over the communication bus in the test. Table IV shows the different operating conditions and the test results.

V. Conclusions and Future Work

The fully distributed EPS architecture was proposed in this paper. This architecture employs microgrids in satellite applications, separating each part of the EPS into standalone modules that are connected through a communication bus and a power bus. Each module can operate alone or be controlled by the optional controller MFM. Different requirements can be satisfied by replacing only the involved modules. The capability of the EPS can be expanded simply by connecting more modules. Prototype modules were designed and tested, showing promising results for small satellite applications.

Authorized licensed use limited to: Universidad Tecnica Federico Santa Maria. Downloaded on March 11,2024 at 21:37:38 UTC from IEEE Xplore. Restrictions apply.

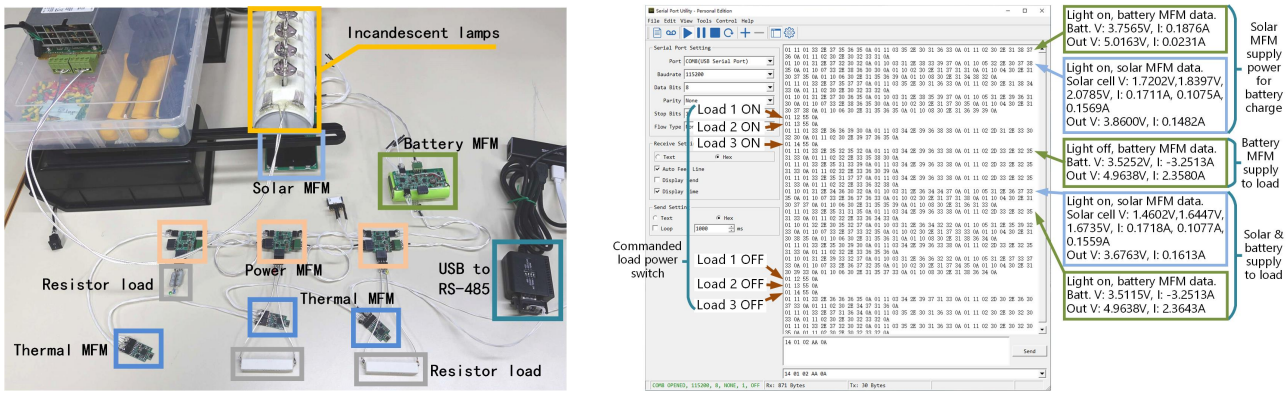

(a) System test configuration of the FD-EPS

(b) Data of the modules on the communication bus

Fig. 9: The fully distributed EPS system test

TABLE IV: Fully distributed EPS system test conditions and results.

Test Name	Conditions	Test Result
Solar MFM supply power for battery charging	Solar MFM irradiated, and supply to battery MFM. No load is turned on.	Solar MFM output voltage: 3.8600 V, current: 0.1482 A. The battery is charging at 0.1876 A.
Battery MFM supply to the load	Battery MFM supplies power to the loads. No output from solar MFM.	Battery MFM output voltage: 3.5252 V, current: 3.2513 A. The loads' current: 960 mA, 956 mA, 449 mA.
Solar MFM & battery MFM supply to the load	Solar MFM and battery MFM both supply power to the loads.	Solar MFM output voltage: 3.6763 V, current: 0.1613 A. Battery MFM output voltage: 3.5115 V, current: 3.2513 A. The loads' current: 960 mA, 956 mA, 449 mA.
Commanded load power switch	Send commands from the computer to power on or off the loads.	The loads are turned on and off according to the commands.
Thermal control	Thermal MFM monitors the load's temperature and controls its power.	The load is turned on and off according to its temperature.
Over-current protection	Simulate the load over-current condition. Cut off the load's power when over-current condition occurs.	The load's power is cut off when over-current occurs.

Despite the promising results, several problems must be considered. One is reliability concerns regarding the solar MFMs. Mounted on the backside of the solar panel, the operating environment of the solar MFMs is harsher than that of other modules, which may reduce their reliability. Special considerations, such as space radiation mitigation and high/low-temperature protection, may be required.

Another is the module design and development for high-power instruments. Most of the sensors and actuators in a satellite consume several watts to dozens of watts, which is acceptable for the power MFM. However, payloads and some instruments require tens to hundreds of watts. Due to size constraints, the temperature rise of the battery MFM and power MFM becomes unacceptable at full load in the space environment. Further improvements and tests are required before it can be used in satellites.

References

[1] Q. Chen, Z. Liu, X. Zhang, and L. Fu, Spacecraft power technology. Beijing: Beijing Institute of Technology Press, 2018.

[2] A. Edpuganti, V. Khadkikar, M. S. E. Moursi, H. Zeineldin, N. Al-Sayari and K. Al Hosani, "A Comprehensive Review on CubeSat Electrical Power System Architectures," IEEE Transactions on Power Electronics, vol. 37, no. 3, pp. 3161-3177, March 2022.

[3] T. M. Lim, A. M. Cramer, J. E. Lumpp, and S. A. Rawashdeh, "A modular electrical power system architecture for small spacecraft," IEEE Transactions on Aerospace and Electronic Systems, vol. 54, no. 4, pp. 1832–1849, 2018.

[4] J. Gonzalez-Llorente, A. A. Lidtke, K. Hatanaka, R. Kawauchi, and K. I. Okuyama, "Solar module integrated converters as power generator in small spacecrafts: Design and verification approach," Aerospace, vol. 6, no. 5, pp. 61, 2019.

[5] A. Ali, H. Ali, J. Tong, M. R. Mughal, and S. U. Rehman, "Modular design and thermal modeling techniques for the power distribution module (pdm) of a micro satellite," IEEE Access, vol. 8, pp. 160723–160737, 2020.

[6] L. Peng, Z. Jun, Y. Xiaozhou, and C. Luping, "Design and validation of modular MPPT electric power system for multi-U CubeSat," in 2017 3rd IEEE International Conference on Control Science and Systems Engineering (ICCSSE), pp. 374–377, Aug. 2017.

[7] I. Fajardo, A. A. Lidtke, S. A. Bendoukha, J. Gonzalez-Llorente, R. Rodríguez, R. Morales, et al., "Design, implementation, and operation of a small satellite mission to explore the space weather effects in LEO," Aerospace, vol. 6, no. 10, pp. 108, 2019.

[8] A. Lashab, M. Yaqoob, Y. Terriche, J. C. Vasquez and J. M. Guerrero, "Space microgrids: New concepts on electric power systems for satellites," IEEE Electrification Magazine, vol. 8, no. 4, pp. 8–19, 2020.

[9] M. Yaqoob, A. Lashab, J. C. Vasquez, J. M. Guerrero, M. E. Orchard and A. D. Bintoudi, "A Comprehensive Review on Small Satellite Microgrids," IEEE Transactions on Power Electronics, vol. 37, no. 10, pp. 12741–12762, 2022.

[10] J. Lee, E. Kim and K. G. Shin, "Design and management of satellite power systems," in 2013 IEEE 34th Real-Time Systems Symposium, pp. 97–106, Dec. 2013.

[11] A. J. Ali, M. Khalily, A. Sattarzadeh, A. Massoud, M. O. Hasna, T. Khattab, et al., "Power budgeting of LEO satellites: An electrical power system design for 5G missions," IEEE Access, vol. 9, pp. 113258–113269, 2021.

[12] L. Kessler Slongo, S. Vega Martinez, B. Vale Barbosa Eiterer, E. Augusto Bezerra, "Nanosatellite electrical power system architectures: Models, simulations, and tests," International Journal of Circuit Theory and Applications, vol. 48, no. 12, pp. 2153–2189, 2020.

Authorized licensed use limited to: Universidad Tecnica Federico Santa Maria. Downloaded on March 11,2024 at 21:37:38 UTC from IEEE Xplore. Restrictions apply.