FloripaSat-2: An Open-Source Platform for CubeSats

Gabriel Mariano Marcelino, André Martins Pio de Mattos, João Cláudio Elsen Barcellos, Brenda Fernandes Ribeiro, Laio Oriel Seman, Edemar Morsch Filho, and Eduardo Augusto Bezerra, *Member, IEEE*

***Abstract*—This letter presents the FloripaSat-2 platform, an open-source service platform already on its second version, including, but not limited to, onboard data handling (OBDH), telemetry, tracking and command (TTC), and electrical power system (EPS) modules. The platform is conceived to be general purpose, i.e., easily adaptable for missions with different payloads and requirements. In this context, an overview of the generic nanosatellite architecture, along with the ongoing missions in which it is being employed, is discussed, including the embedded systems, functionalities, and components. Also, the relevant source code is available in an online repository and can be used and expanded to different kinds of CubeSat missions. Finally, good practices regarding the development and a FlatSat proposal for faster testing of the subsystems are presented to aid engineers in testing and adapting the systems to their mission requirements.**

***Index Terms*—CubeSat, nanosatellite, open-source, service platform.**

I. Introduction

IN THE context of the new space era, marked by the advent of the CubeSat standard [1] and a consequent increase in the accessibility of space missions, the FloripaSat-1, a 1U CubeSat [2], was developed by SpaceLab (Space Research Laboratory) at UFSC (Federal University of Santa Catarina). The nanosatellite, launched in December 2019, was the first mission to employ the FloripaSat platform, conceived to be general-purpose, i.e., easily adaptable for missions with different payloads and requirements. Based on the experience acquired with FloripaSat-1, the platform has been improved and is currently supporting the development of three other missions, namely: global open collecting data system (GOLDS)-UFSC (2U), Catarina-A1 (2U), and Aldebaran-1 (1U).

These missions represent a step forward for the FloripaSat platform concerning its first version, used in the FloripaSat-1 mission. Supporting different missions requires a stable and responsive platform to meet users' demands. For instance, to meet the specific GOLDS mission requirements, the platform has been adapted to sustain the integration of the EDC payload. Other general improvements were fostered by the lessons learned from FloripaSat-1. The GOLDS-UFSC, Catarina-A1, and Aldebaran-1 missions are expected to demonstrate the viability of employing CubeSats with national technology in Brazil. Therefore, this letter presents an overview of the design improvements and development methodology involved in creating the FloripaSat-2 platform.

A. Adoptability

FloripaSat-2 is an open-source CubeSat platform; thus, its design and specifications are freely accessible to the public. Users can alter and adjust the platform to their particular needs and requirements. Being open-source also means that the platform is being updated and enhanced by a community of developers and users. This ensures that the platform remains current with the sector's most recent technology and developments.

FloripaSat-2 is based on FloripaSat-1, a platform that has flight heritage, which means that the platform has the advantage of being based on a tried-and-true design, boosting the likelihood of mission success. The platform's modularity enables customers to quickly combine diverse payloads and subsystems, giving a high degree of flexibility. It also features many interfaces, including I^2C, UART, SPI, and USB, for connecting various devices. The platform can be a potential choice for educational, research, and commercial satellite missions.

II. Platform's Design

This section describes the design of the platform's subsystems, composed of the service modules[1] of a CubeSat [electrical power system (EPS), telemetry, tracking, and command (TTC), and onboard data handling (OBDH)], presented in Fig. 1. The new design is a direct upgrade from the one used

Manuscript received 1 February 2023; revised 28 February 2023 and 11 March 2023; accepted 18 March 2023. Date of publication 21 March 2023; date of current version 29 February 2024. This work was supported by the Brazilian Space Agency (AEB). This manuscript was recommended for publication by C. Meza. *(Corresponding author: Laio Oriel Seman.)*

Gabriel Mariano Marcelino, André Martins Pio de Mattos, João Cláudio Elsen Barcellos, Brenda Fernandes Ribeiro, and Eduardo Augusto Bezerra are with the SpaceLab, Federal University of Santa Catarina, Florianópolis 88040900, Brazil (e-mail: gabriel.marcelino@spacelab.ufsc.br; andre.mattos@spacelab.ufsc.br; joao.claudio.barcellos@spacelab.ufsc.br; brenda.r@posgrad.ufsc.br; eduardo.bezerra@spacelab.ufsc.br).

Laio Oriel Seman is with the SpaceLab, Federal University of Santa Catarina, Florianópolis 88040900, Brazil, and also with the Graduate Program in Applied Computer Science, University of Vale do Itajaí, Itajaí 88302-901, Brazil (e-mail: laio@univali.br).

Edemar Morsch Filho is with the SpaceLab, Federal University of Santa Catarina, Florianópolis 88040900, Brazil, and also with the Department of Aeronautical Engineering, São Paulo State University, São Paulo 13876-750, Brazil (e-mail: edemar.filho@unesp.br).

Digital Object Identifier 10.1109/LES.2023.3260066

[1]The project of the individual subsystems can be found at: https://github.com/spacelab-ufsc/floripasat2-doc.

1943-0671 © 2023 IEEE. Personal use is permitted, but republication/redistribution requires IEEE permission.
See https://www.ieee.org/publications/rights/index.html for more information.

Authorized licensed use limited to: Universidad Tecnica Federico Santa Maria. Downloaded on March 11,2024 at 21:16:05 UTC from IEEE Xplore. Restrictions apply.

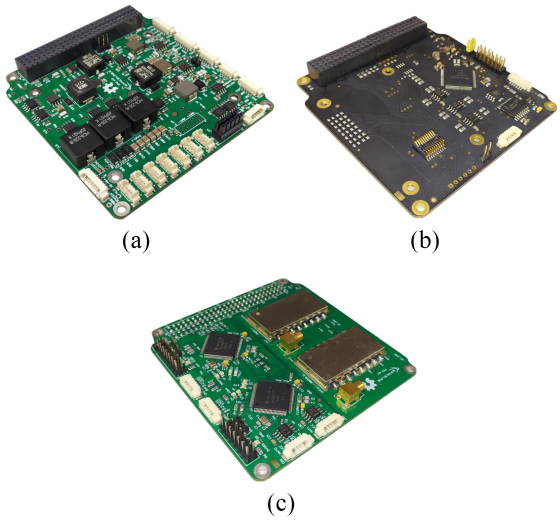

Fig. 1. FloripaSat-2 platform's main subsystems. (a) EPS. (b) OBDH. (c) TTC.

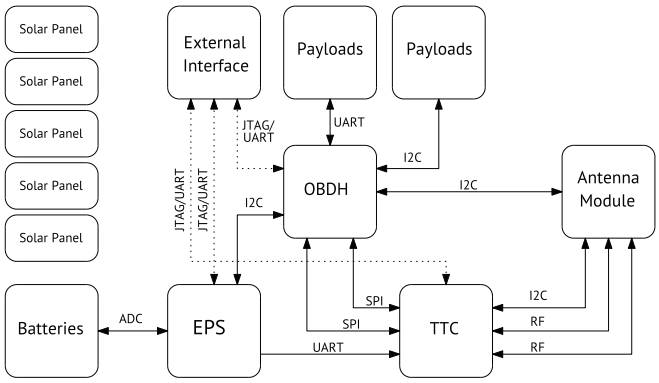

Fig. 2. Overview of the GOLDS-UFSC's subsystems, main system's buses, and the serial communication protocols.

during the FloripaSat-1 [2], and still uses an real-time operating system (RTOS), for it grants a flight heritage to this new mission. The objective was to develop cleaner, more generic, and reliable hardware and firmware for the subsystems, with adaptations for the new mission's requirements.

All the subsystems, the main system's buses, and the serial communication protocols used are presented in Fig. 2. The OBDH uses the I^2C and SPI protocols to communicate with the EPS, antenna module, payloads, and TTC to get relevant information regarding them or even to configure its functioning. For instance, the OBDH can manually set EPS functioning, configuring its energy harvesting system and heaters. The EPS uses the UART to send periodic data (e.g., voltage, current and temperature measurements, and more) to the TTC. More details regarding these subsystems will be briefly presented throughout this section.

A. EPS

The EPS subsystem is designed to harvest, store, and distribute energy for the nanosatellite. The energy harvesting system still works as in the previous version, using a maximum power point tracking (MPPT) algorithm to extract the maximum available power from the solar panels. However, the battery module (BM) used to store the harvested energy was modified to accommodate four lithium-ion batteries, increasing the small satellite's load. Both Battery Module 2C (BAT2C), used in the FloripaSat-1 platform, and Battery Module 4C (BAT4C) can be connected to the new EPS.

The system comprises three boost converters, one for each pair of parallel solar panels. Each separate boost has an MSS1278T-104MLD inductor, an SI4166DY MOSFET switch, and a B340LA-13-F diode. Since the outputs are connected, all converters use the same output filter. Control PWM signals are generated at a frequency of 100 kHz from the MCU. The solar panels' current measurement circuit relies on the MAX9934TAUA+ current sensing amplifier. The MPPT algorithms work through a typical perturb and observe algorithm.

The EPS was developed to keep the batteries at a proper temperature during eclipse periods; then two power resistors were used as heaters. ADS1248, together with RTD sensors, is utilized to measure and control their temperature.

Furthermore, the DS2775G+ was substituted by the DS2777G+, an integrated circuit (IC) with the same functionalities, but that uses the interintegrated circuit (I^2C) protocol instead of 1-Wire protocol. This was necessary because the implementation of the FreeRTOS conflicted with the timing requirements of the 1-wire protocol.

B. OBDH

The OBDH system is an onboard computer designed for the nanosatellite. It is responsible for synchronizing actions and the data flow between other subsystems (i.e., EPS, TTC, and payloads) and the Earth segment. Like the FloripaSat-1 platform, the OBDH packs the generated data into data frames and transmits it to Earth through the TTC, or stores it on nonvolatile memory for later retrieval. However, the microSD card and the other three flash memories were substituted by NOR flash and FRAM memories. The microSD card was removed due to its unreliability, as vibrations could easily damage it. The other three flash memories (IS25LP128) did not have a proper application and had a low storage capacity, so it was decided to remove them.

A one-piece connector was added to support the connection of a daughterboard, which can add specific features/interfaces to the subsystem. This is highly based on Hercules [3], developed by GAUSS, NanoDock DMC-3 [4], developed by GOMspace, and IOBC [5], developed by ISISPACE.

Finally, the I^2C interface between subsystems, payloads, and OBDH was modified, too. In the FloripaSat-1 platform, some subsystems, like the EPS, were connected at the same I^2C bus of the payloads, which could be a problem if one fails. Nevertheless, an I^2C buffer was added in each subsystem, including the OBDH. In this sense, the subsystems or even a payload that is connected to the same bus can fail without interfering, making the interface more reliable [6].

C. TTC

The TTC system communicates between the Earth segment and the satellite and can be divided into two independent

Authorized licensed use limited to: Universidad Tecnica Federico Santa Maria. Downloaded on March 11,2024 at 21:16:05 UTC from IEEE Xplore. Restrictions apply.

submodules: 1) Beacon and 2) Downlink/Uplink. The beacon is an independent submodule that transmits a periodic signal containing an identification data (ID) of the satellite and some primary telemetry data. The Downlink/Uplink submodule is the primary communication device. It has a bidirectional data link to receive telecommands from the Earth and transmit all available data back to Earth. The most noticeable modification is the implementation of a second MSP430F6659 to make the TTC more independent. Furthermore, it reduces the processing load of the OBDH.

Some additions were made to increase the reliability of the subsystem. External watchdogs were implemented for the microprocessor, as it improves its reliability (adding a redundant watchdog timer). Moreover, four current sensors were proposed, one for each radio and microprocessor, as it could aid the prevention of latch-ups [7] and measure the power consumption.

Another modification was adopting the serial peripheral interface (SPI) protocol to communicate with external subsystems. The controller area network (CAN) protocol would be the ideal choice, which is not possible at the moment because of some development limitations. Nevertheless, the SPI provided a good cost-benefit, offering more reliability than the I^2C protocol.

III. Supported Missions

A. GOLDS-UFSC

SpaceLab is developing the 2U CubeSat GOLDS-UFSC alongside AEB (Brazilian Space Agency) and INPE (National Institute for Space Research), which is providing the mission's main payload, the EDC board [8]. GOLDS-UFSC is part of the GOLDS, a collaborative project that aims to contribute to the Brazilian Environmental Data Collection System (SBCDA) by opening the infrastructure to institutions interested in cooperating, whether by adding CubeSats to the constellation, ground stations, or sensors to the environmental monitoring network [9]. GOLDS-UFSC will launch in 2023.

1) Payloads: The EDC payload is a module developed for CubeSats and capable of capturing data from data collection stations (DCPs) installed across the Brazilian territory. The collected data can be retrieved through the main communication link offered by the satellite service modules. This will be the first satellite using the EDC module in a space environment. As a secondary payload, we intend to integrate the Payload-X board [10]. This module is a technology validation experiment, qualifying a radiation-tolerant FPGA [11]. This module will only be used for limited periods and upon request by telecommand due to higher priority for EDC payload. GOLDS-UFSC also includes a message repeater application to enable the amateur radio community to interact with the satellite and actively participate in the mission.

2) Structure: The structure of GOLDS-UFSC is a standard 2U, with baseline dimensions of $10 \times 10 \times 30$ cm, as shown in Fig. 3(a), made of aluminum alloy, with ground black anodized rails, following the specifications of the CubeSat standard [1].

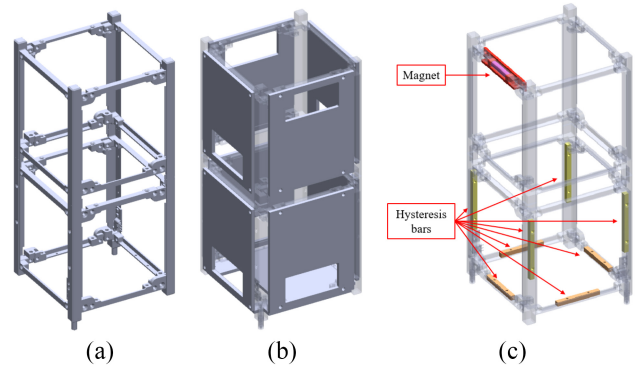

Fig. 3. Structure, shields, and passive attitude control system. (a) 2U structure. (b) Radiation shields. (c) Attitude control system.

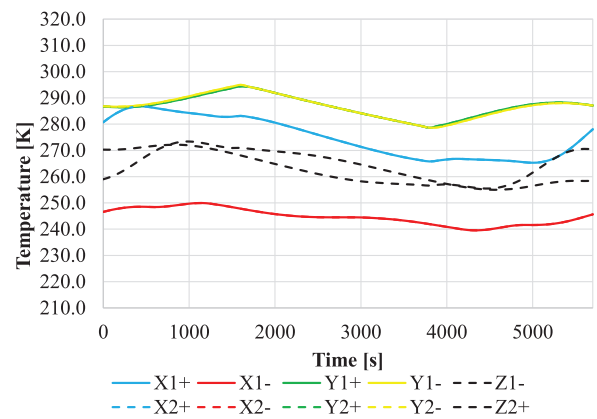

Fig. 4. Heat transfer simulation of the CubeSat, without the active thermal control.

To minimize the risks associated with the radiation from outer space, aluminum shields are added behind the solar panels. The sheets have 3 mm of width and are made of 6061 aluminum. The internal components of the satellite do not allow every one of its sides to be covered by the shields, so small apertures exist in this protection, as illustrated in Fig. 3(b).

3) Attitude Control: The attitude control is a passive method that aligns the CubeSat with the Earth's magnetic field. This subsystem has a magnet that promotes the alignment and hysteresis bars damp oscillations around the magnetic field, integrated at the structure as shown in Fig. 3(c).

4) Thermal Control: A thermal simulation of the CubeSat, without thermal control, for one complete orbit is in Fig. 4. The curves are for the external surfaces of the CubeSat, for both the first and second levels of the structure. The structure has a high thermal conductivity coefficient, so there are similar values between heights 1 and 2 from the same side. This graph evidences that excessive low-temperature values may be achieved in orbit, so critical components must be protected against this freezing scenario.

Based on this result, the thermal control of GOLDS-UFSC is composed of one active control for the protection of the battery against cold temperatures, based on two resistors of 24 Ω attached at the BAT4C, as shown in Fig. 5. The control is an ON/OFF controller aimed to maintain the temperature between 5.0 and 7.5 °C.

Authorized licensed use limited to: Universidad Tecnica Federico Santa Maria. Downloaded on March 11,2024 at 21:16:05 UTC from IEEE Xplore. Restrictions apply.

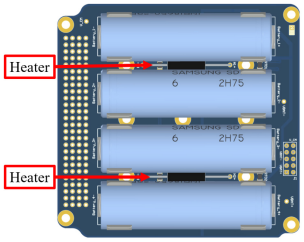

Fig. 5. Position of the heaters.

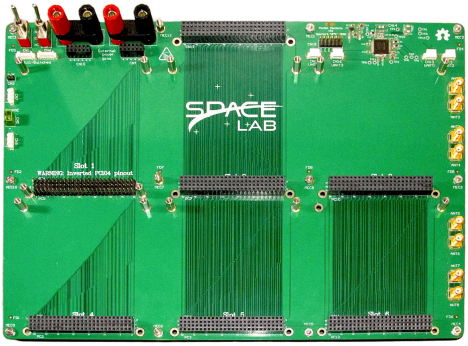

Fig. 6. FlatSat platform developed for the GOLDS-UFSC.

B. Catarina-A1

Catarina-A1 is the first satellite of fleet A of the Catarina Constellation Program [12]. Created in May 2021 by the Brazilian government, the program consists of developing a constellation of 13 nanosatellites and aims to grow the space industry in the state of Santa Catarina while supporting the agricultural industry along with the National Civilian Defense.

C. Aldebaran-1

The platform also supports the Aldebaran-1 mission, under development by undergraduate students and professors of Federal University of Maranhão (UFMA). The mission aims to explore the applications of long-range (LoRa) communication in the space environment and empower the human resources involved in the project.

IV. Good Practices

For future missions, FloripaSat-1's development revealed some adjustments. For instance, subsystem firmware should be developed more systematically. The subsystems should be interfaced and evaluated using a more practical and safer method. During the FloripaSat-1 mission, the subsystems were interfaced using cables, screws, double-sided tapes, and cable ties. Nevertheless, this process made the testing of the subsystems an inconvenient and unproductive process. Connecting the subsystems with wire harnesses can be time consuming and potentially dangerous because someone could accidentally short-circuit two buses, damaging the hardware permanently. Moreover, a bad contact could take hours to diagnose in an assembled system.

We then developed our platform based on platforms from other missions [13] and [14]. The platform contains binding posts to interface an external power supply, connections to interface a computer, built-in kill switches, RBF simulators, battery chargers, and antenna connectors (see Fig. 6). This platform is utilized to enable faster testing and also in a remote-monitored workbench for long-term evaluations.

V. Conclusion

This study introduced FloripaSat-2, a second-generation open-source service platform, including OBDH, TTC, and EPS modules. The relevant source code is available in an online repository. It can be used and expanded to other missions besides the ones already cited in this letter (namely, GOLDS-UFSC, Aldebaran, and Catarina-A1).

The presented platform leverages the feedback received from FloripaSat-1 to improve the quality and implement new desired features. The lessons learned from the previous version of the platform also led to a new developing methodology, much more in consonance with the latest industry trends.

The first mission scheduled to fly the upgraded FloripaSat platform is the GOLDS-UFSC, which will leverage the provided modules to provide the necessary infrastructure for the EDC payload, which will also appear in the upcoming Catarina-A1 CubeSat.

For future works, it is planned to present the results from the in-orbit validation of the platform, along with the details and data from the missions in which it will be employed.

References

[1] A. Johnstone, "CubeSat design specification," California Polytech. State Univ., San Luis Obispo, CA, USA, Rep. 14.1, 2022. [Online]. Available: https://www.cubesat.org/

[2] G. M. Marcelino, S. Vega-Martinez, L. O. Seman, L. K. Slongo, and E. A. Bezerra, "A critical embedded system challenge: The FloripaSat-1 mission," *IEEE Latin America Trans.*, vol. 18, no. 2, pp. 249–256, Feb. 2020.

[3] "Hercules." Accessed: Aug. 16, 2022. [Online]. Available: https://www.gaussteam.com/products/onboard-computer/hercules/

[4] "NanoDock DMC-3." Accessed: Aug. 16, 2022. [Online]. Available: https://gomspace.com/shop/support/nanodock-dmc-3.aspx

[5] "ISIS on-board computer." Accessed: Aug. 16, 2022. [Online]. Available: https://www.isispace.nl/product/on-board-computer/

[6] M. Holliday, Z. Manchester, and D. G. Senesky, "On-orbit implementation of discrete isolation schemes for improved reliability of serial communication buses," *IEEE Trans. Aerosp. Electron. Syst.*, vol. 58, no. 4, pp. 2973–2982, Aug. 2022.

[7] P. J. Botma, A. Barnard, and W. H. Steyn, "Low cost fault tolerant techniques for nano/pico-satellite applications," in *Proc. Africon*, 2013, pp. 1–5.

[8] K. Queiroz, S. Dias, J. Duarte, and M. Carvalho, "Uma solução para o sistema brasileiro de coleta de dados ambientais baseada em nanossatélites," *HOLOS*, vol. 7, pp. 132–142, Dec. 2018.

[9] F. Mattiello-Francisco, M. Carvalho, M. Santos, and G. Garbi, "Fostering environmental data collection with GOLDS constellation," in *Proc. UN/Brazil Symp. Basic Space Technol.*, 2018, pp. 1–9.

[10] C. A. Rigo et al., "A fault-tolerant reconfigurable platform for communication modules of satellites," in *Proc. IEEE Latin Amer. Test Symp. (LATS)*, 2019, pp. 1–6.

[11] F. Viel et al., "Payload-XL: A platform for the in-orbit validation of the BRAVE FPGA," *IEEE Embedded Syst. Lett.*, early access, Jul. 15, 2022, doi: 10.1109/LES.2022.3191638.

[12] M. da Ciência, Tecnologia e Inovações/Agência Espacial Brasileira. "Criado o Programa Constelação Catarina; Portarian 590." 2021. Accessed: Jul. 15, 2022. [Online]. Available: https://www.gov.br/pt-br/noticias/educacao-e-pesquisa/2021/05/criado-o-programa-constelacao-catarina

[13] J. Praks et al., "Aalto-1, multi-payload CubeSat: Design, integration and launch," *Acta Astronautica*, vol. 187, pp. 370–383, Oct. 2021.

[14] S. Walsh et al., "Development of the EIRSAT-1 CubeSat through functional verification of the engineering qualification model," *Aerospace*, vol. 8, no. 9, p. 254, 2021.

Authorized licensed use limited to: Universidad Tecnica Federico Santa Maria. Downloaded on March 11,2024 at 21:16:05 UTC from IEEE Xplore. Restrictions apply.