Battery Charger

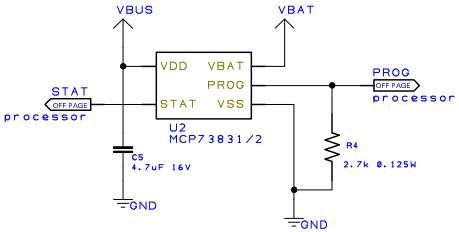

LiPo Battery

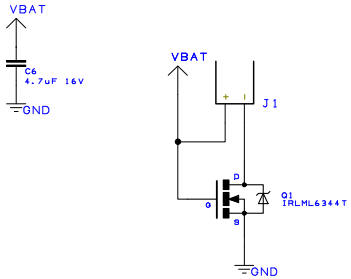

3.3V/600mA Regulator

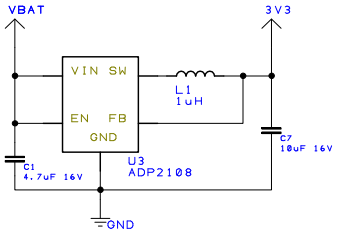

1.5V/200mA Regulator

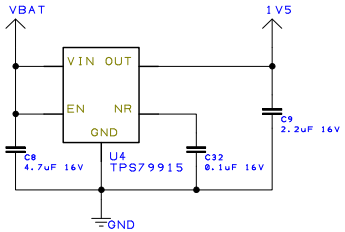

USB

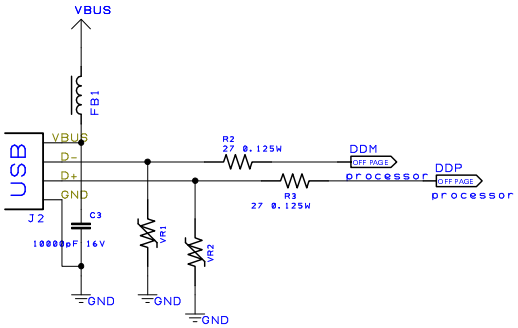

Backlight Driver

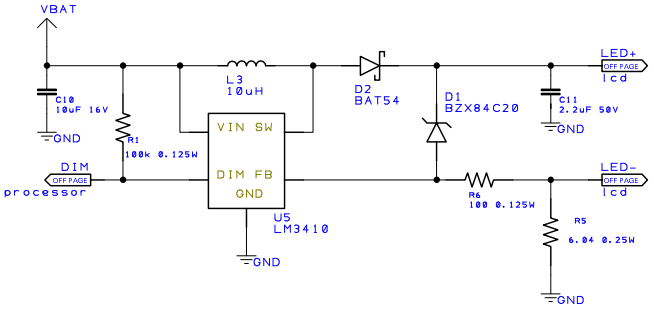

PROJECT:	Cinemagraph Display		
DRAWING TITLE:	Power Section		
DRAWN BY:	Griffin Adams	REVISION:	v0.2
SHEET:	OF	STATUS:	
DATE:	05/20/2014	DESIGNSPARK PCB available for FREE at www.DesignSpark.com/PCB	