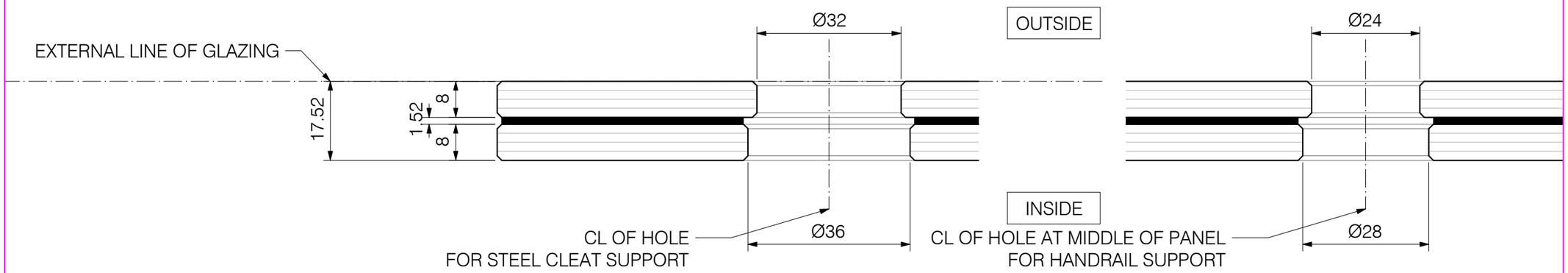

02 S-60 HOLES ON FLAT GLASS PANELS 17.52mm AT BALUSTRADE
PLAN DETAIL 1:1 @A3

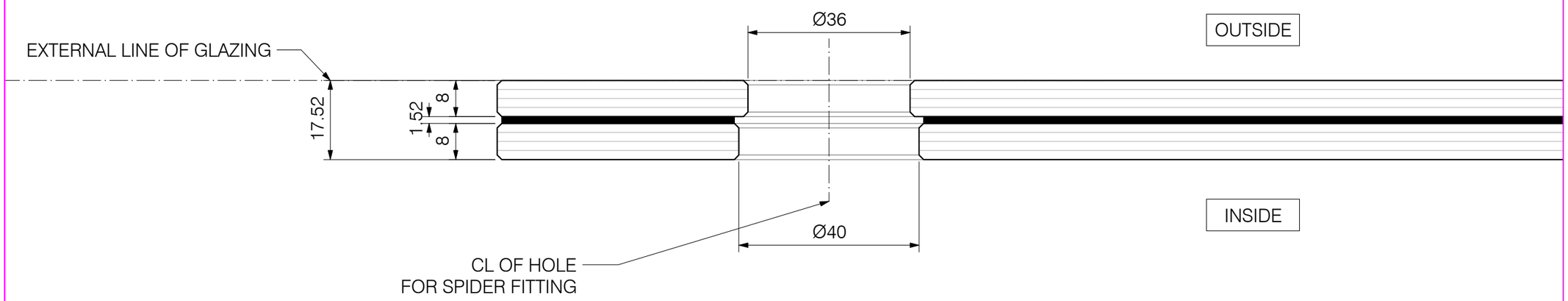

01 S-50 HOLES ON FLAT GLASS PANELS 17.52mm AT LIFT
PLAN DETAIL 1:1 @A3

NOTES :

1. DO NOT SCALE. ALL DIGITAL DATA MUST BE CHECKED AGAINST THE HARD COPY. ANY ADDITIONAL DIMENSIONS REQUIRED MUST BE SPECIFICALLY REQUESTED FROM EMPIRE GLASS. DRAWINGS IN DIGITAL FORMAT ARE SUPPLIED FOR CONVENIENCE PURPOSES ONLY. NO RELIANCE MAY BE PLACED ON ANY INFORMATION OBTAINED FROM ANY DIGITAL DATA.

2. ALL DIMENSIONS ARE IN MILLIMETERS AND LEVELS ARE IN METERS.

COPYRIGHT :

THIS DRAWING AND THE INFORMATION SHOWN HEREON IS THE PROPERTY OF EMPIRE GLASS PTY LTD AND MAY NOT BE USED FOR ANY OTHER PURPOSE THAN THAT FOR WHICH THE DRAWING IS SUPPLIED

THIS DRAWING IS COPYRIGHT AND CANNOT BE REPRODUCED IN WHOLE OR IN PART BY ANY MEDIUM OR SHOWN TO THIRD PARTIES WITHOUT WRITTEN PERMISSION OF EMPIRE GLASS PTY LTD.

AS BUILT

NOTES:

-

ISSUE	DATE	DESCRIPTION OF CHANGE	BY
D	19.06.2013	AS BUILT	T.HO
C	28.09.2012	GLASS HOLE SIZES	T.HO
B	27.09.2012	GLASS HOLE SIZES	T.HO
A	25.09.2012		T.HO

ARCHITECHTS NAME:
LEVEL 5 70 KING STREET
SYDNEY 2000 NSW
TEL: +612 9251 7077
FAX: +612 9251 7072
EMAIL : FJMT@FJMT.COM.AU

DEVELOPERS NAME:
Grocon
152 GLOUCESTER STREET
SYDNEY NSW 2000
TEL: +61 2 8249 7000
FAX: +61 2 9247 7768

ALUMINIUM WINDOWS AND DOORS:
UNIT 21,
15-23 KUMULLA ROAD
MIRANDA NSW 2228
TEL: +61 2 95225355
FAX: +61 2 95225366

WWW.EMPIREGLASS.COM.AU

PROJECT NAME:
SOUTH STAIR
LEGION HOUSE 161
CASTLEREAGH ST

DRAWING TITLE:
STAIR GLASS
PRODUCTION

NOTES:

PROJECT NORTH:

PROJECTION:

DRAFTING STANDARD TO AS 1100

DRAWN BY:	CHECKED BY:	DATE:
T. HO	G. ULACCO	19.06.2013

SCALE:	JOB No:	DRAWING No:	ISSUE:
N.T.S		GL-S-08	D

X:\ARMA\PROJECTS\1221_Empire_Castlereagh\60_Production\GlassProduction\ARMA_2D_STAIR_GLASS_PRODUCTION_130520_ASBUILT.3dm - Date: 19/06/13